POOL COVER SPECIALISTS®

AUTO COVERS MADE SIMPLE

2022 Parts Catalog

latham

The Pool Company

SP-PCS-0005 bm 4.7.22

© Latham Pool Products, Inc. 2022 All rights reserved.

Table of Contents

Infinity 4000™ Systems	3
Infinity 4000™ Mechanism Assembly 2017	4
Infinity 4000™ Mechanism Assembly 2014	5
3 Wire Bison Motor w/Limit Control	6
3 Wire Bison Motor w/LV Control	7
Hydraulic Power Pack Complete	8
End Casting Assembly	9
Universal Double Dog Assembly	10
Top Track Slider Assembly	11
Top Track Molded Wheel Assembly	12
Top Track Wheel Assembly	13
Slider Assembly UT for 2-1/2” LE	14
Slider Assembly 3” Extended	15
Standard Under Track Slider Assembly	16
Slider Assembly UT for 4” LE	17
Slider Assembly UT for 2-1/2” x 4-1/2” LE	18
Vanishing Edge Assembly & Hardware	19
IDEC Key Switch Assembly	20
Polymer Housing	21
Aluminum Bench	22
Deck Mount Plastic Housing	23
Slider Assemblies	24
Slider Comparison Chart	25-27

Trak & Hardware for TT Systems	28
Trak & Hardware for UT Systems	29
Replacement Parts UT Systems Pre 2018	30
Hydraulic Motors & Controllers	31
Motors & Motor Controllers	32
System Switch Assemblies	33
Competitors Hardware	34
Lid and Bench Brackets	35
Aluminum Lid for TT and UT Systems	36
Flush Lid for TT and UT Systems	37
Flat Lid for TT and UT Systems	38
Walk-on Tray Lid Aluminum	39
Box Perimeter & Lid Forming	40
Lid Forming Molds & Kits - Inclined	41
Lid Forming Molds & Kits - Cantilever	42
Lid Descenders & Transition Pieces UT	43
Tubes and Leading Edges	44
Flush Track Kits and Hardware	45
Reusable Coping Forms & Kits	46
Vinyl Liner Coping & Encapsulation Kits	47-49
Gunite & Fiberglass Encapsulation Kits	50
Hardware for Encapsulation Kits	51
ManualTrak™ Mechanism	52

© Latham Pool Products, Inc. 2022 All rights reserved.

Infinity 4000™ Systems

	RECESSED MECHANISMS
IM4010-L3-GLD	Infinity 4000™ Recessed Left w / Bison Motor
IM4010-L3LV-GLD	Infinity 4000™ Recessed Left w / Bison Motor & Low Voltage Circuit Board
IM4010-R3-GLD	Infinity 4000™ Recessed Right w / Bison Motor
IM4010-R3LV-GLD	Infinity 4000™ Recessed Right w / Bison Motor & Low Voltage Circuit Board
	DECK MOUNT MECHANISMS
IM4000-L3-GLD	Infinity 4000™ DM Left w / Bison Motor
IM4000-L3LV-GLD	Infinity 4000™ DM Left w / Bison Motor & Low Voltage Circuit Board
IM4000-R3-GLD	Infinity 4000™ DM Right w / Bison Motor
IM4000-R3LV-GLD	Infinity 4000™ DM Right w / Bison Motor & Low Voltage Circuit Board

	RECESSED MECHANISM - No Motor
IN4010-R-GLD	Infinity 4000™ Recessed Right with Tube End Casting
IN4010-L-GLD	Infinity 4000™ Recessed Left with Tube End Casting
	DECK MOUNT MECHANISM - No Motor
IN4000-R-GLD	Infinity 4000™ Deck Mount Right with Tube End Casting
IN4000-L-GLD	Infinity 4000™ Deck Mount Left with Tube End Casting

	HYDRAULIC RECESSED MECHANISMS
IM4010-LH2-GLD	Infinity 4000™ Recessed Mechanism Left Side
IM4010-RH2-GLD	Infinity 4000™ Recessed Mechanism RT Side
	HYDRAULIC DECK MOUNT MECHANISMS
IM4000-LH2-GLD	Infinity 4000™ Deck Mount Mechanism Left Side
IM4000-RH2-GLD	Infinity 4000™ Deck Mount Mechanism RT Side

© Latham Pool Products, Inc. 2022 All rights reserved.

Infinity 4000™ Mechanism Assembly

2017 Replacement Parts

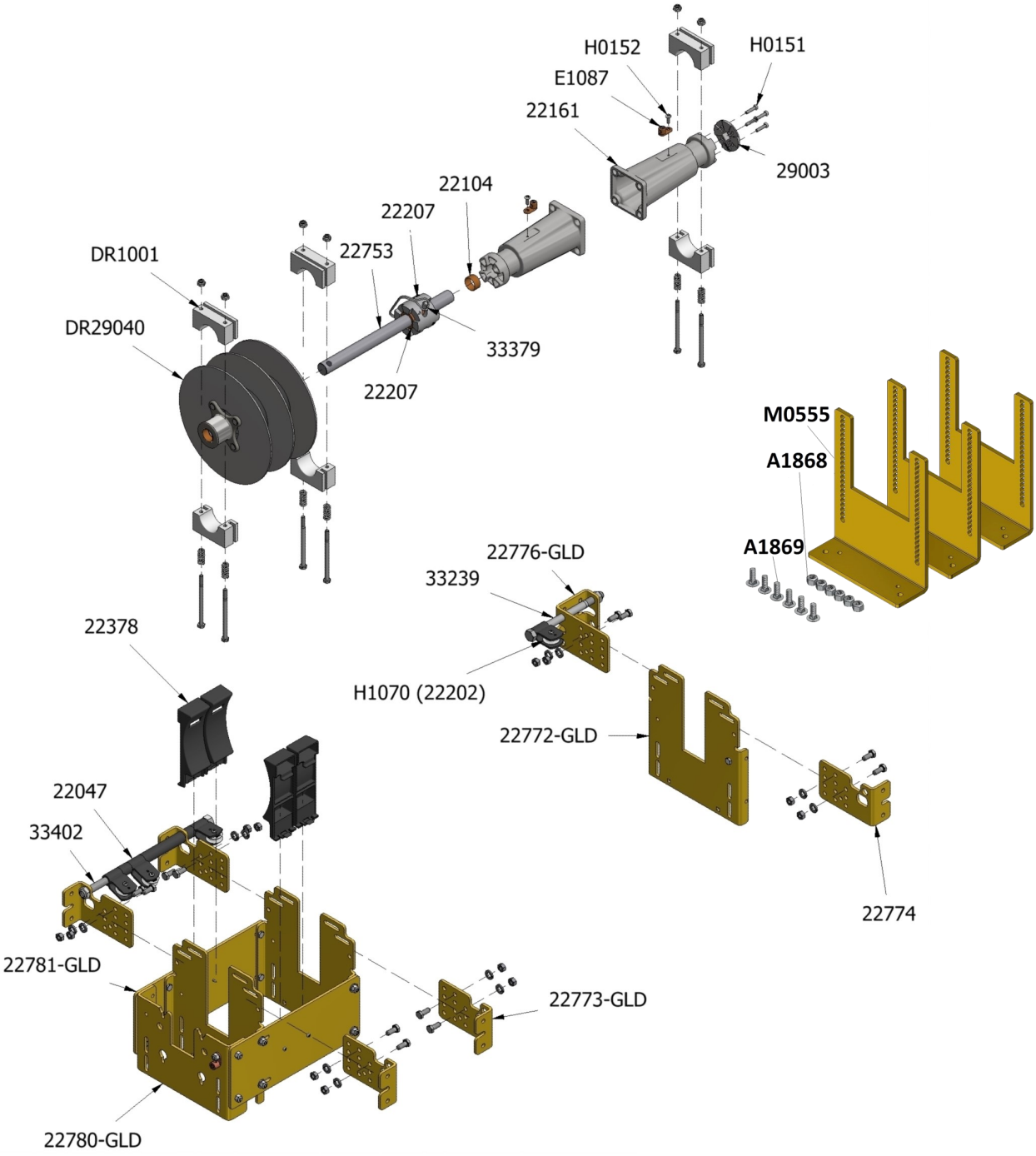

Note: Some parts may be discontinued or limited stock

© Latham Pool Products, Inc. 2022 All rights reserved.

Infinity 4000™ Mechanism Assembly

2014 Replacement Parts

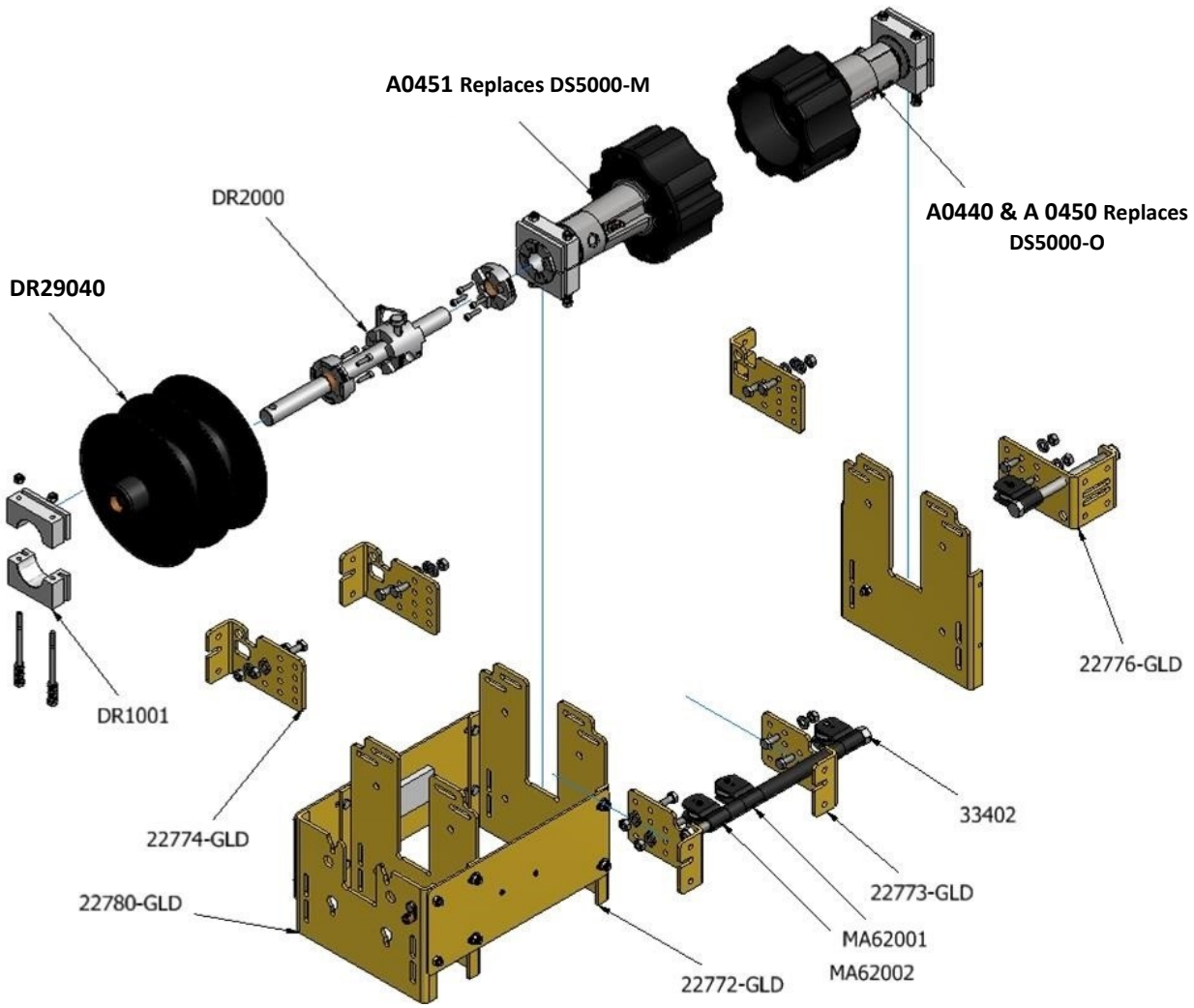

Note: Some parts may be discontinued or limited stock

© Latham Pool Products, Inc. 2022 All rights reserved.

Standard 3 Wire Bison Motor w/ Limit Control

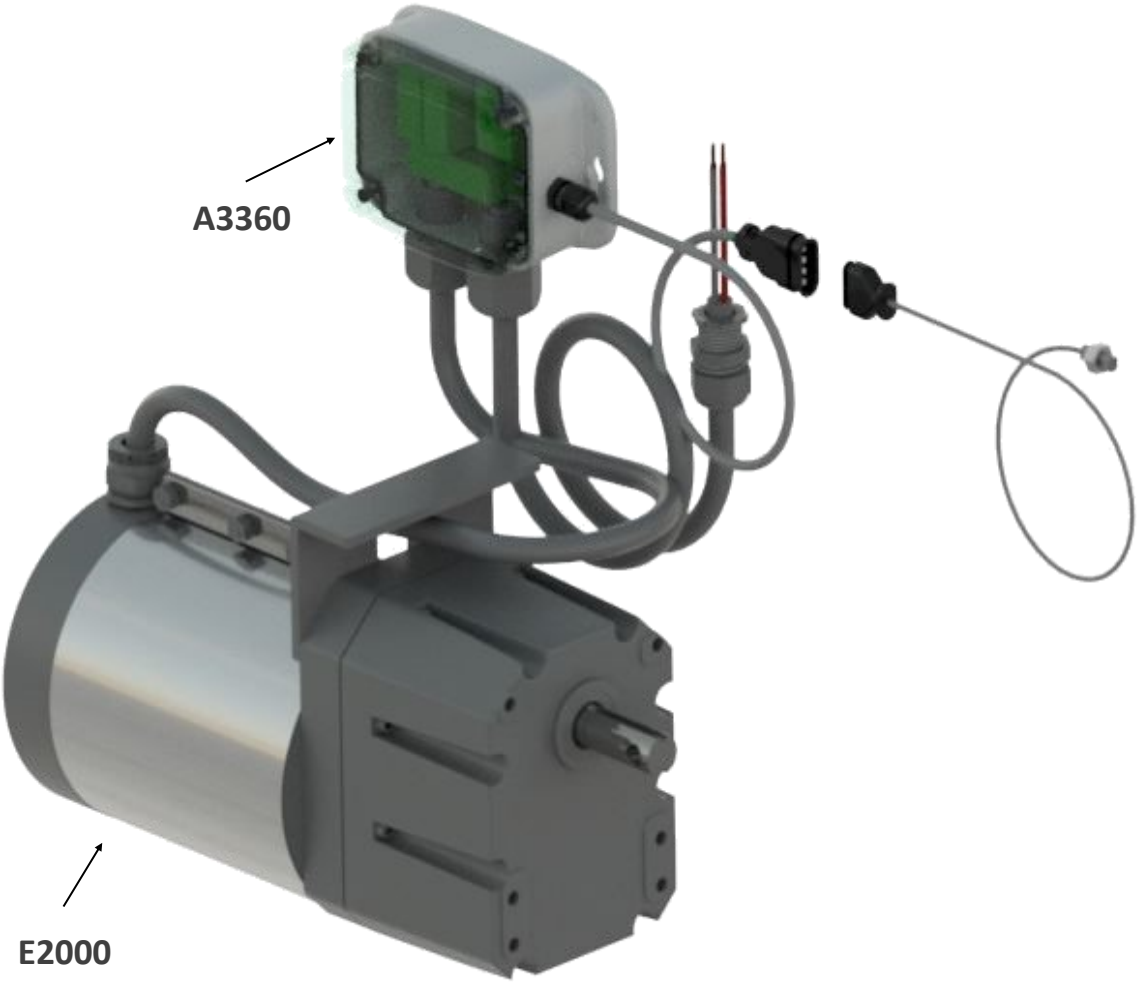

A3361	Standard 3 Wire Motor w/ Limit Control 110V
E2000	Latham AC Motor 115VAC
A3360	3 Wire Limit Control & Sensor

© Latham Pool Products, Inc. 2022 All rights reserved.

Standard 3 Wire Bison Motor w/ LV Control

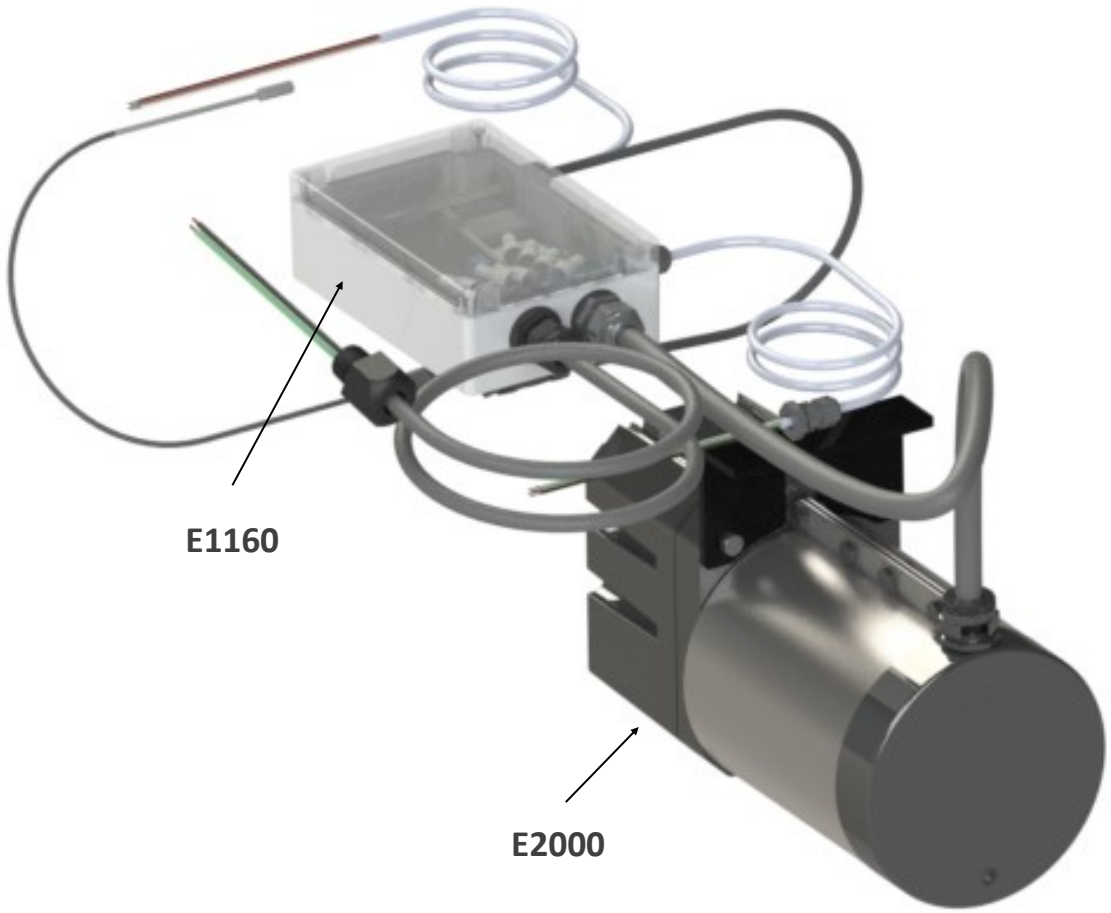

A0570	Standard Motor w/ LV Control 3 Wire 110V 121
E2000	Latham AC Motor 115VAC
E1160	Motor Control Board for Electric Motors 121

© Latham Pool Products, Inc. 2022 All rights reserved.

Hydraulic Power Pack Complete

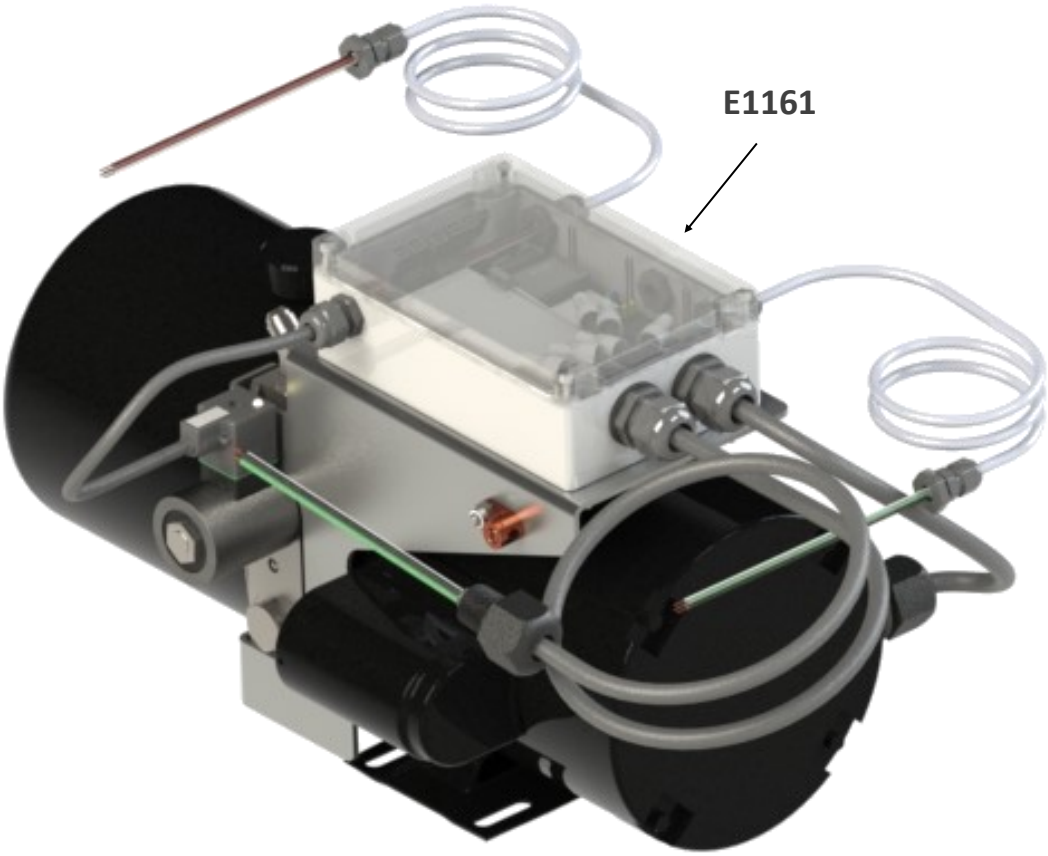

A0572	Hydraulic Power Pack Complete US 220V 121
A0573	Hydraulic Power Pack Complete IEC 240V 121
E1161	Hydraulic Control Board Assembly 121

© Latham Pool Products, Inc. 2022 All rights reserved.

End Casting Assembly

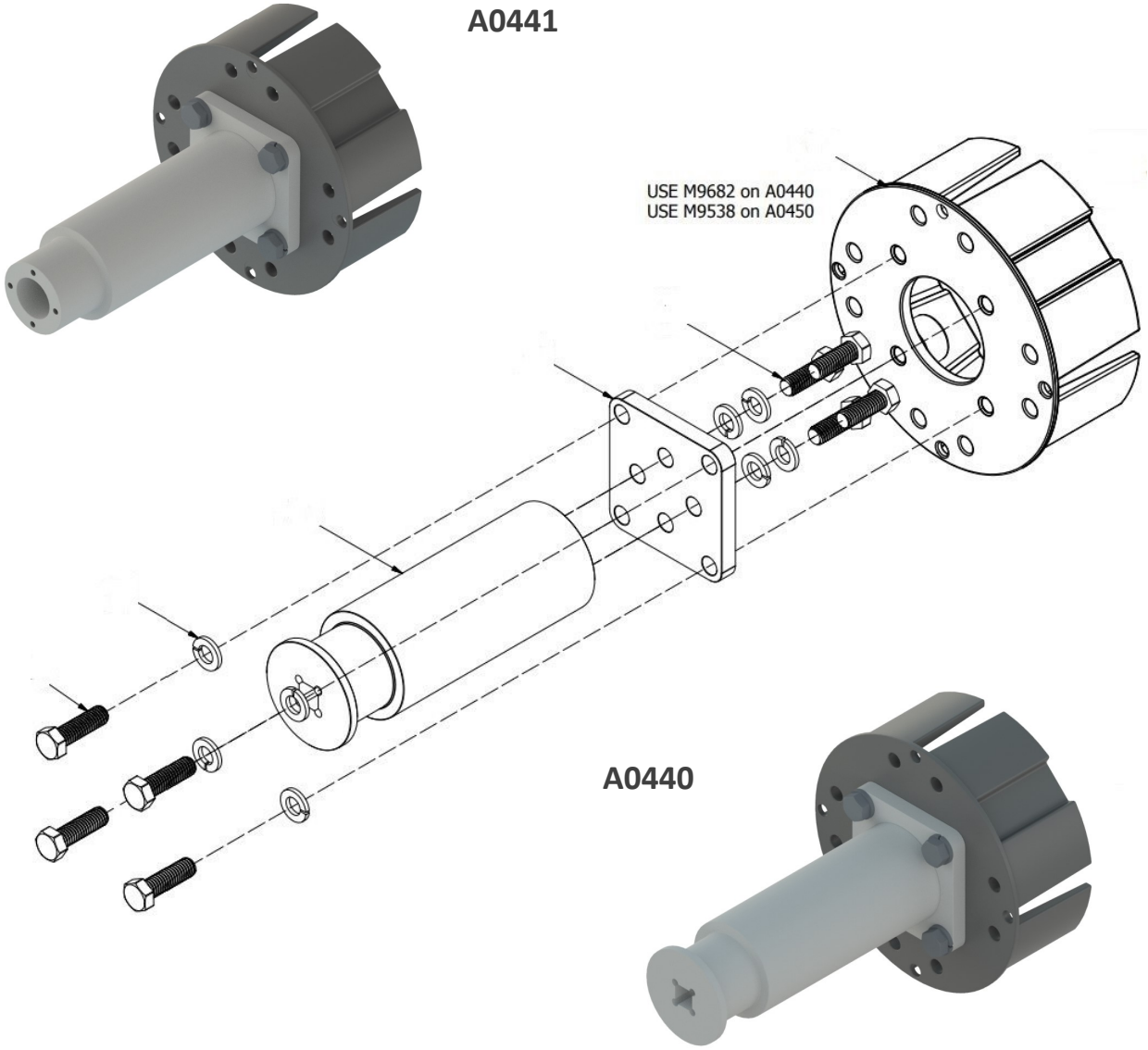

A0440	2016 Retro NME End Casting Assembly
A0441	2016 Retro ME End Casting Assembly

© Latham Pool Products, Inc. 2022 All rights reserved.

Universal Double/Single Dog Assembly

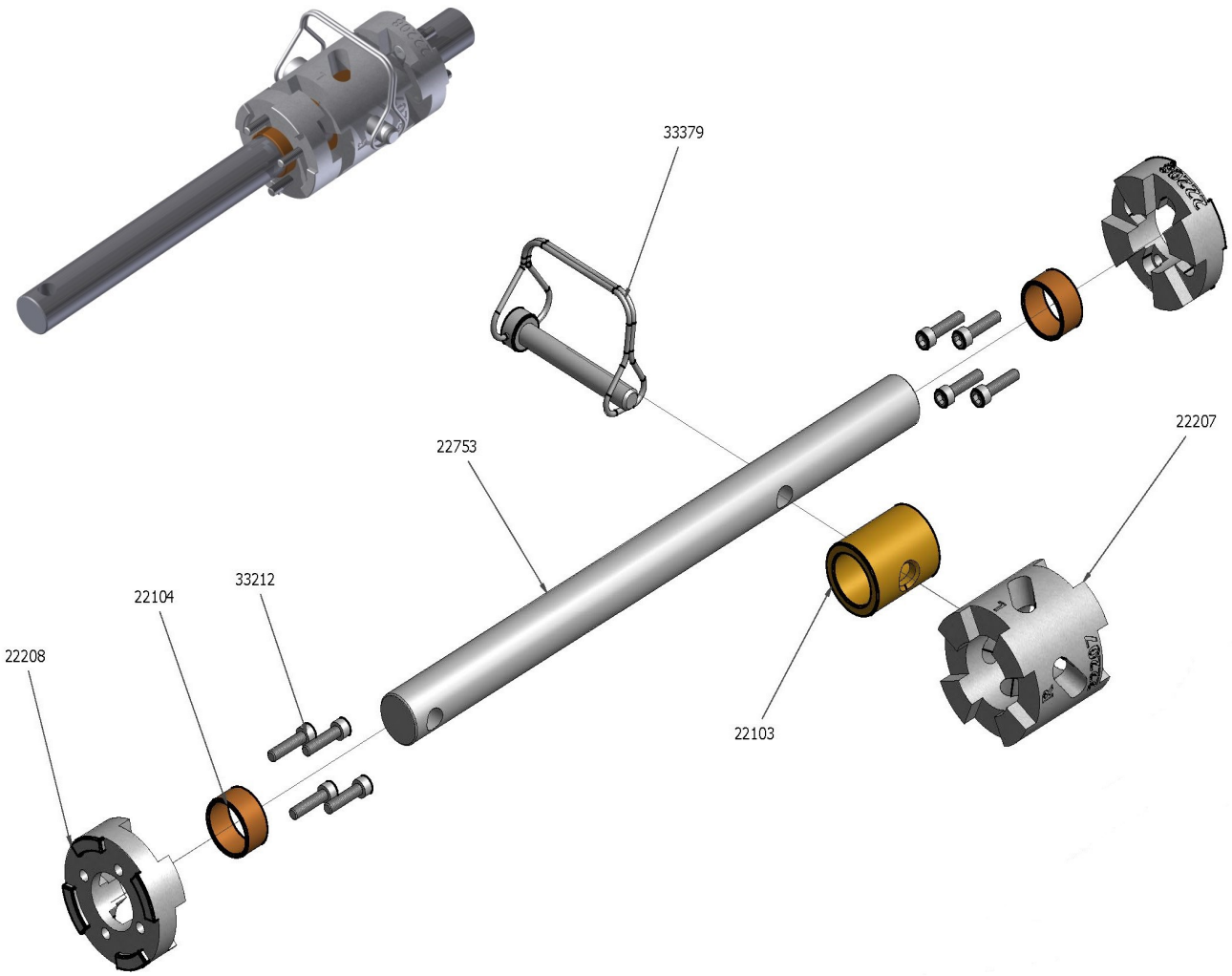

DR2000	Universal Double / Single Dog, 7/8” Shaft
22208	Universal Single Dog
22207	Universal Double Dog
A2000	Infinity 2000 Universal Gear Replacement Kit 3/4” Shaft (Pre 2004)

© Latham Pool Products, Inc. 2022 All rights reserved.

Top Track Slider Assembly

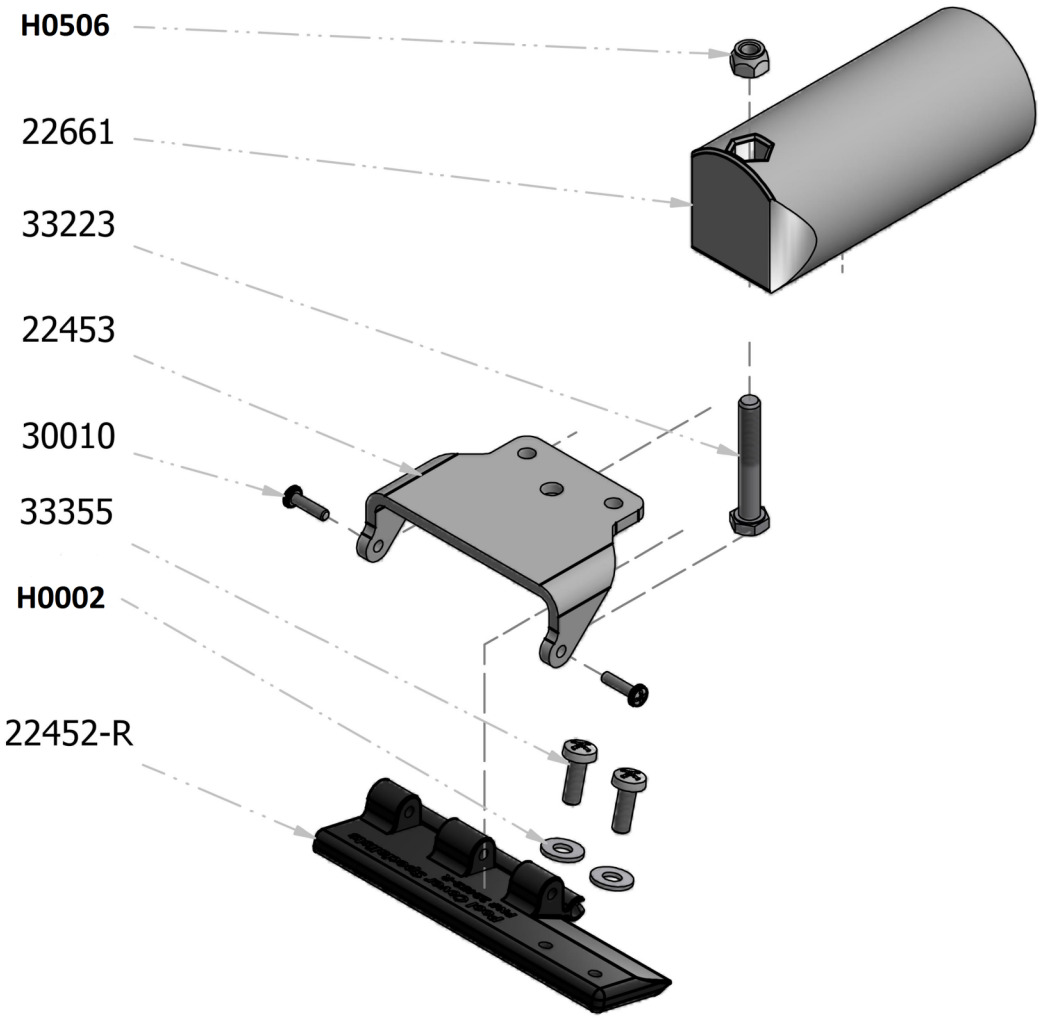

TT2009	Top Track Slider Assembly for 2-1/2” LE
SL22661	Replacement Slip Dowel Kit
22452-L or R	Top Track Slider 4” LE

© Latham Pool Products, Inc. 2022 All rights reserved.

Molded Top Track Wheel Assembly

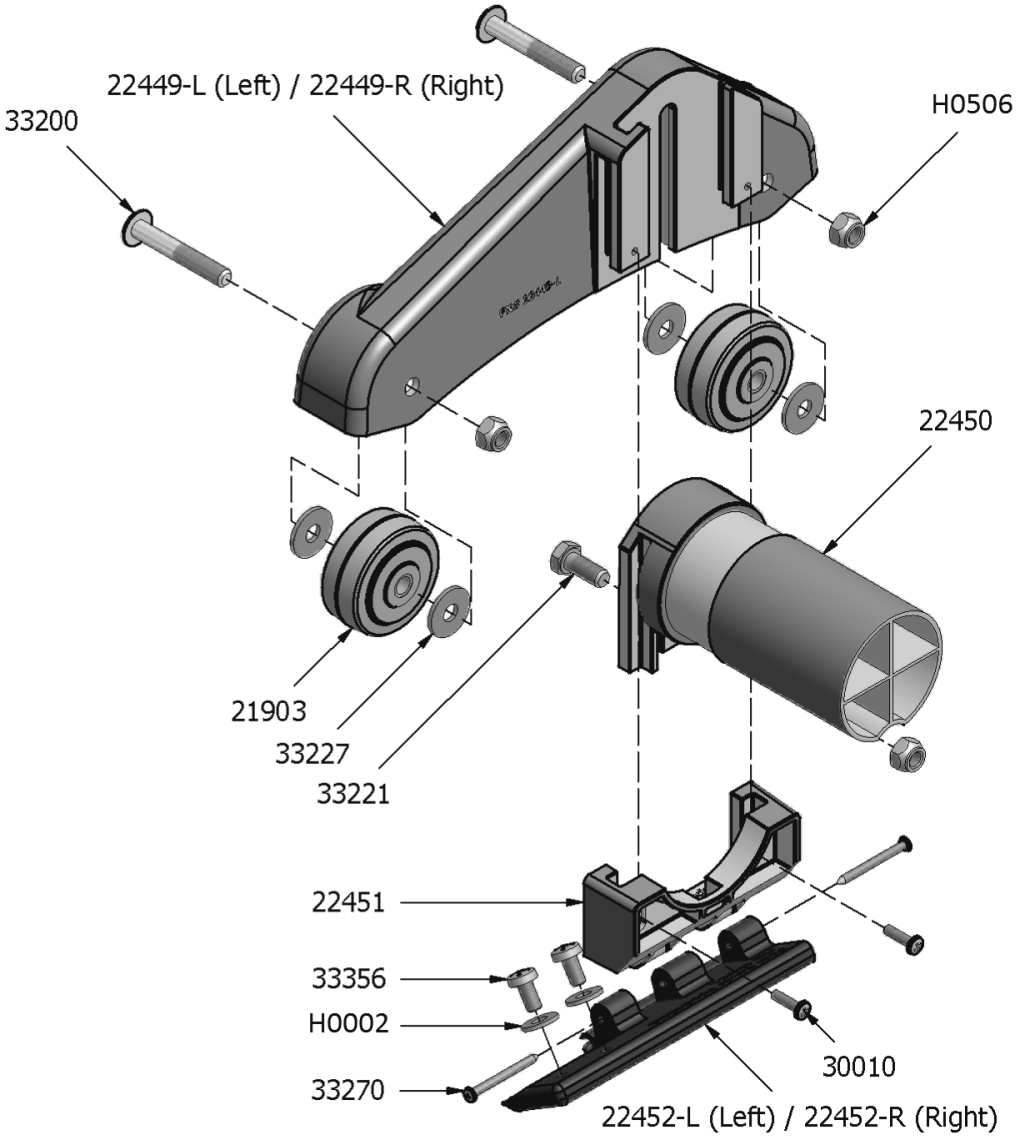

TT2010	Molded Top Track Wheel Assembly
22452-L or R	Top Track Slider 4” LE
TT21903	Wheel, Colson 2”

© Latham Pool Products, Inc. 2022 All rights reserved.

Top Track Wheel Assembly

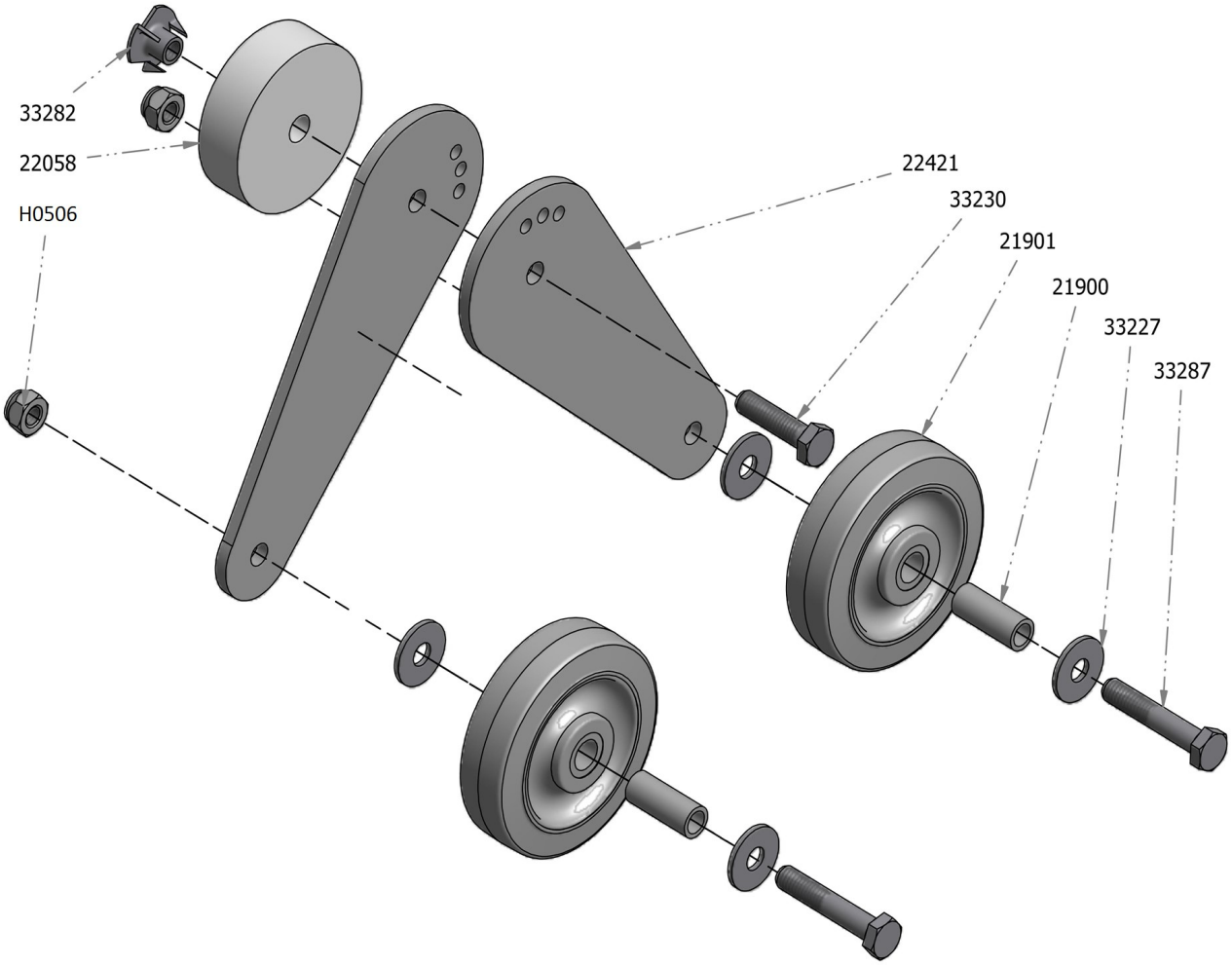

TT1003	Top Track Wheel Assembly for 2-1/2” LE
TT21901	Wheel, 3” Colson Replacement Kit
TT1005	Leading Edge Dowel Assembly

© Latham Pool Products, Inc. 2022 All rights reserved.

Slider Assembly for 2-1/2” LE UT

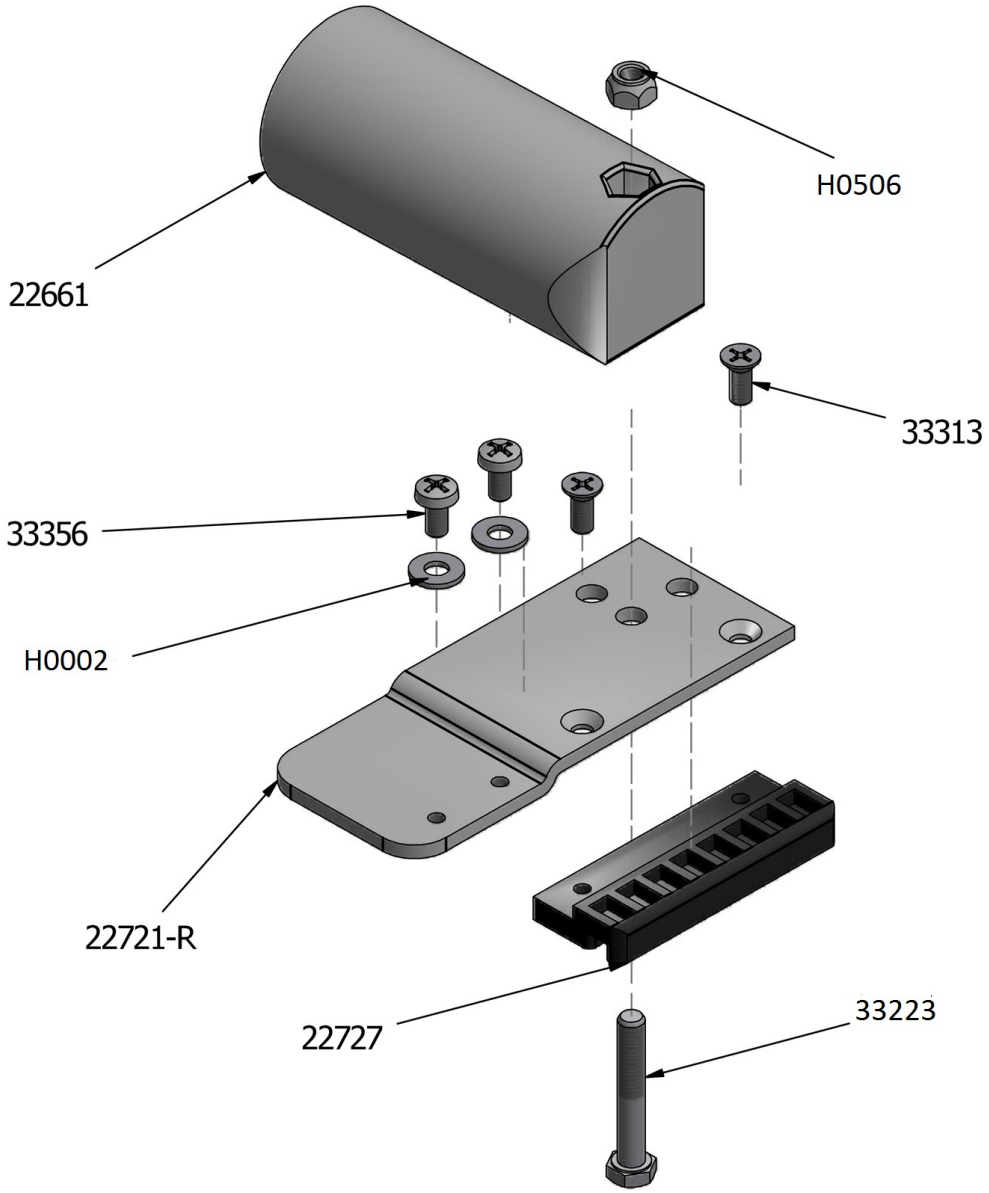

UTO1016	Slider Assembly, UT for 2-1/2” LE
SL22661	Replacement Slip Dowel Kit
SL22721	Under Track Slider Bracket Kit
SL22727	Replacement Snap-In UT Slider (for standard PCS UT) SET

© Latham Pool Products, Inc. 2022 All rights reserved.

Slider Assembly 3” Extended UT

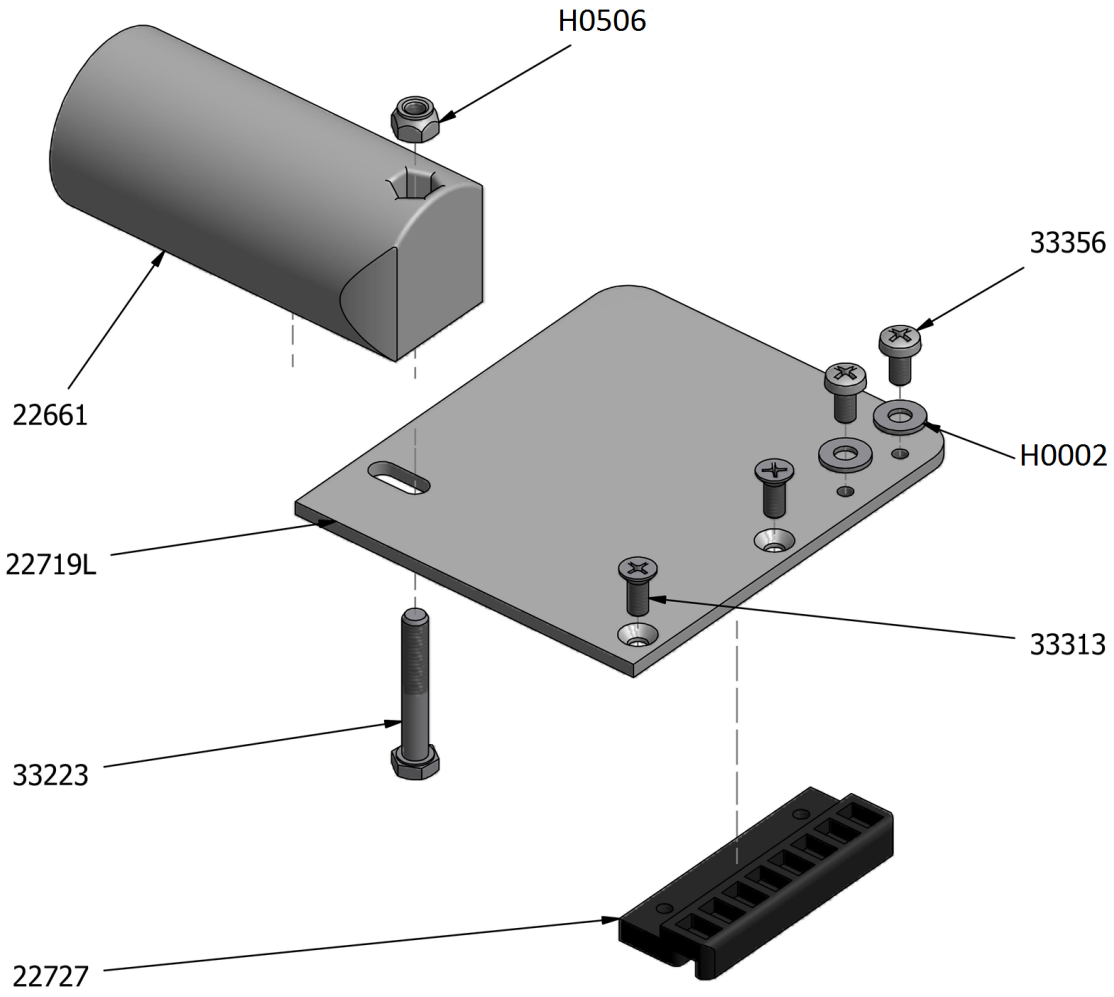

UTO1016-3	Slider Assembly 3” Extended Under Track
SL22661	Leading Edge Slip Dowel
22719L or R	Extended Slider Plate 3” (Left or Right)
SL22727	Replacement Snap-In UT Slider (for standard PCS UT) SET

© Latham Pool Products, Inc. 2022 All rights reserved.

Standard UT Slider Assembly

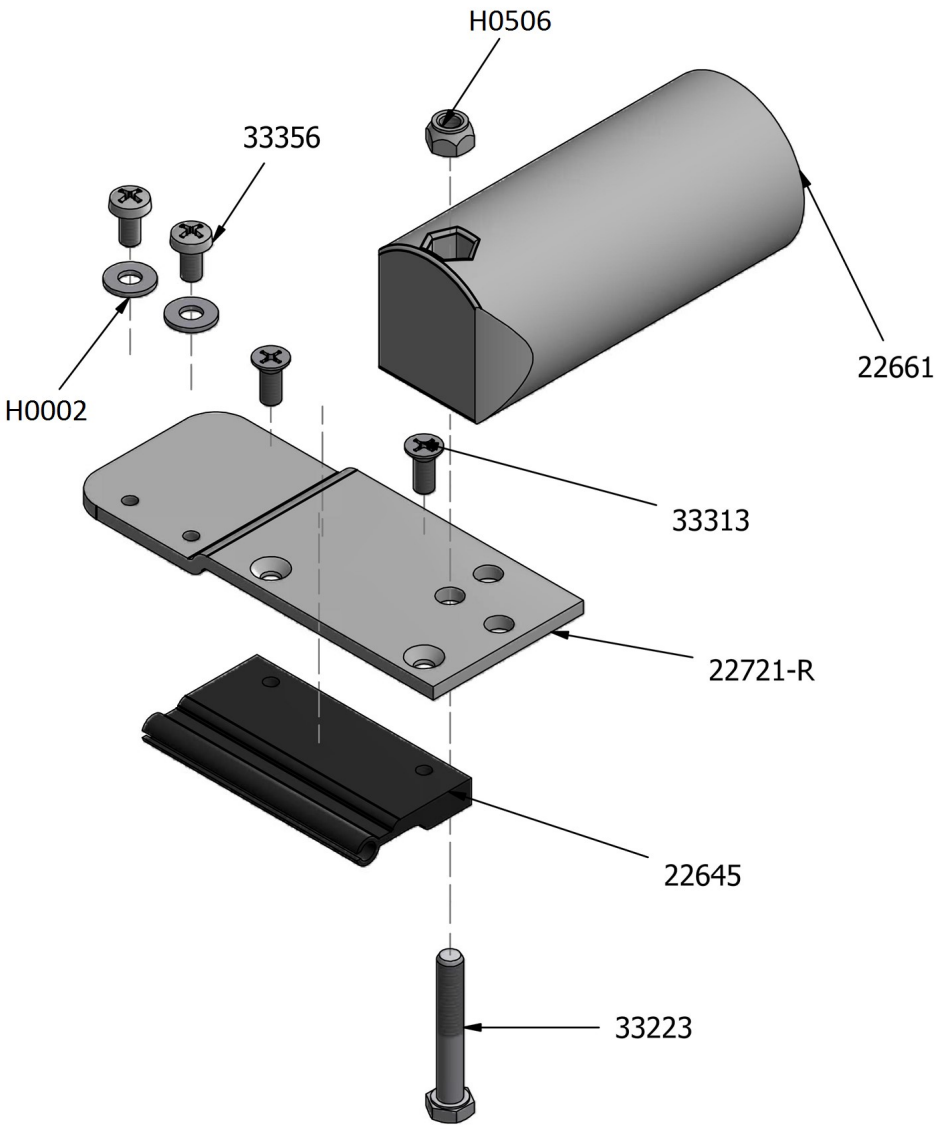

UT1015	Under Track Slider Assembly (Used w/ old style UT)
SL22661	Leading Edge Slip Dowel (One side only)
SL22721	UT Slider Bracket Replacement Kit SET
SL22645	Rectangle Short Slider SET

© Latham Pool Products, Inc. 2022 All rights reserved.

Slider Assembly UT for 4” LE

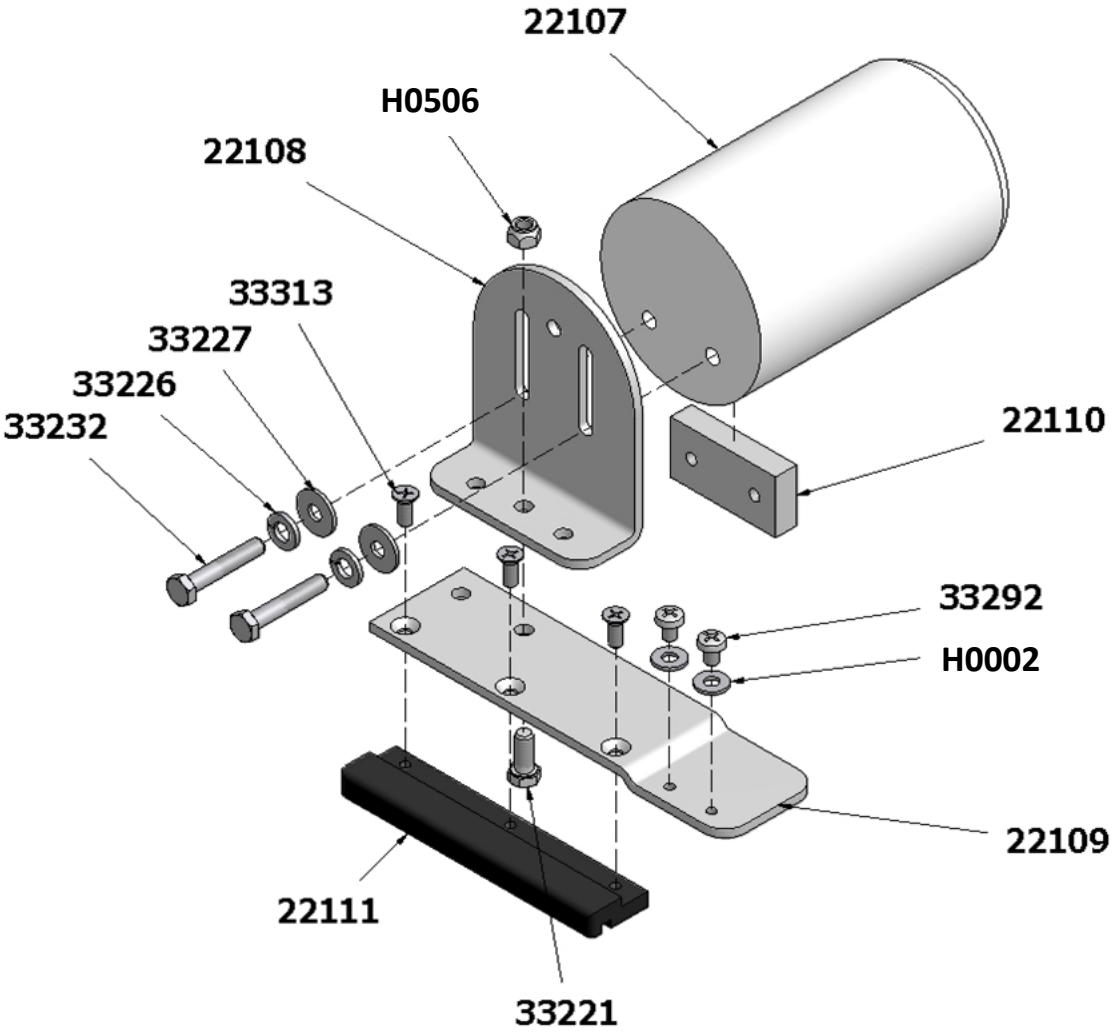

UTO1018	LE Slider Assembly for 4” LE SET
22111	4” LE UT Snap-in Slider

© Latham Pool Products, Inc. 2022 All rights reserved.

Slider Assembly UT for 2-1/2 x 4-1/2” LE

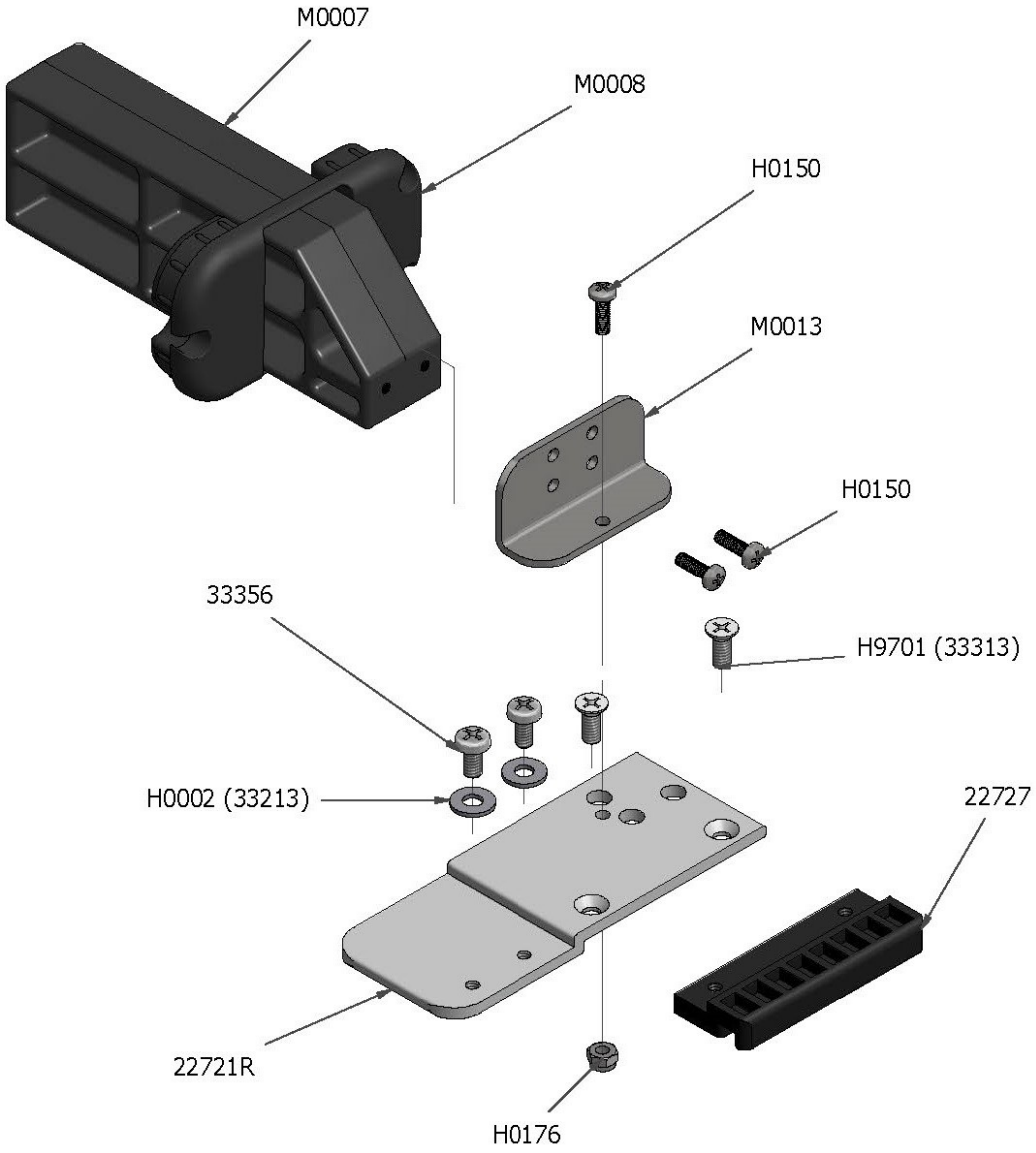

SL22310	2-1/2 x 4-1/2” LE Slider Assembly (Left & Right)
SL22301	2-1/2 x 4-1/2” LE Slider Assembly Left
SL22300	2-1/2 x 4-1/2” LE Slider Assembly Right
22727	Snap-in Under Track Slider

© Latham Pool Products, Inc. 2022 All rights reserved.

Vanishing Edge Assembly & Hardware

	A3833 A3834	VE Guide Feed w/Pulley Redirecting Bracket LEFT (Motor Right) VE Guide Feed w/Pulley Redirecting Bracket RIGHT (Motor Left)
	A3730 A3731	VE Kit - Redirects the Rope Under the Roll-up Tube, LEFT VE Kit - Redirects the Rope Under the Roll-up Tube, RIGHT
	A3451 A3452	Bottom VE Guide Feed RIGHT Bottom VE Guide Feed LEFT
	M3600	Teardrop Shaped VE Spacer
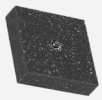	M3818	Spacer for VE Track 1-1/2” x 1-1/2” x 3/8”
	A2873 A2874	Slider Assembly UT Vertical VE LEFT Slider Assembly UT Vertical VE RIGHT
	M9501 M9502 M9503	VE LE Support for 2-1/2” LE 3-1/2” VE LE Support for 2-1/2” LE 4-1/2” VE LE Support for 2-1/2” LE 5-1/2”
	A0265 A1414 A1415	Diverter Pulley for VE, Mounts Behind Guide Feed L or R/ ME or NME Pulley Endcap TT for Vanishing Edge VE SS RIGHT Pulley Endcap TT for Vanishing Edge VE SS LEFT
	A1417	Pulley Endcap UT w/ Stop VE Side

© Latham Pool Products, Inc. 2022 All rights reserved.

IDEC Key Switch Assembly

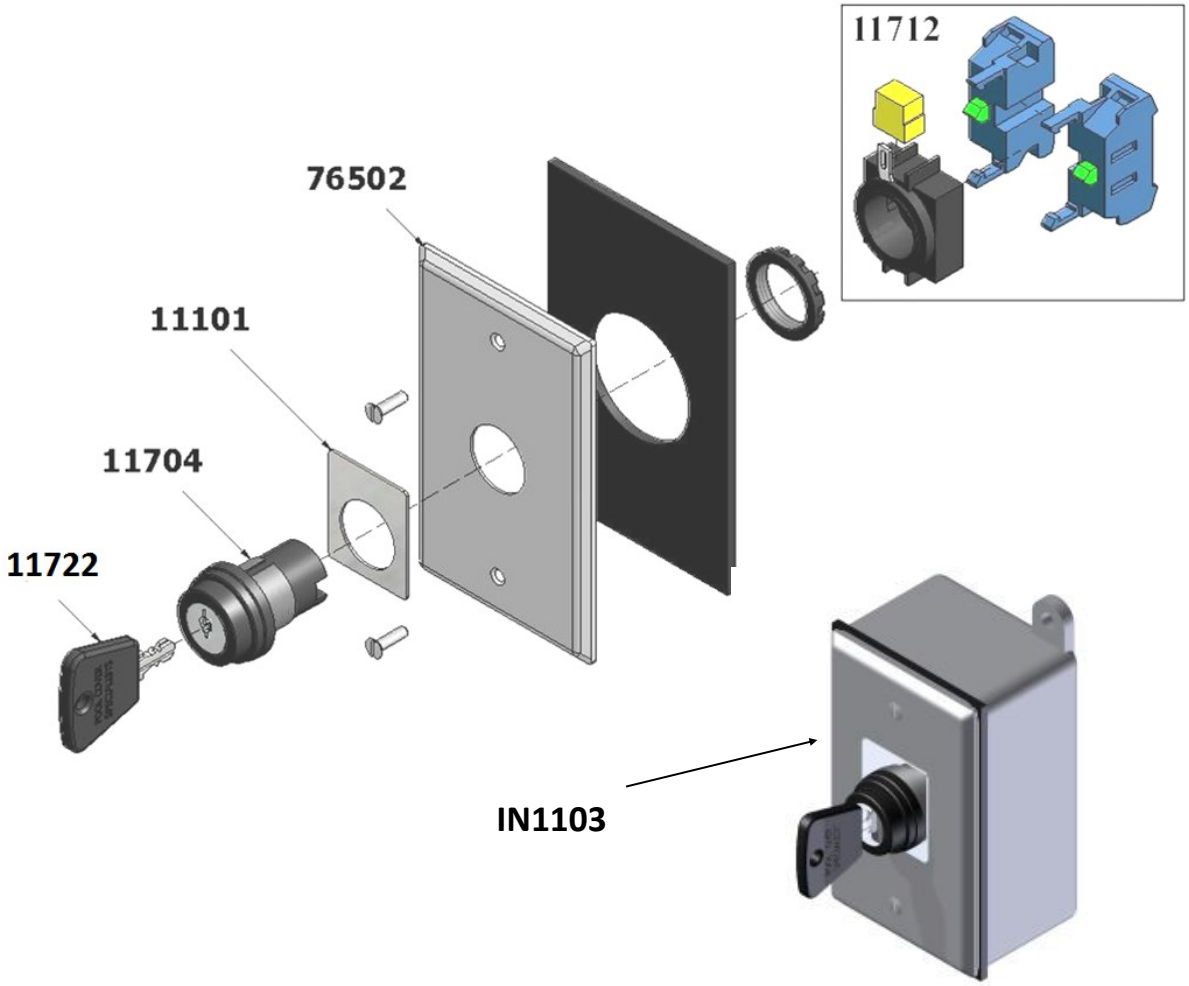

IN1104	IDEC Key Switch Assembly w/o Box
IN1103	IDEC Key Switch with Box
11722	IDEC Key (Set of 2)

© Latham Pool Products, Inc. 2022 All rights reserved.

Polymer Housing

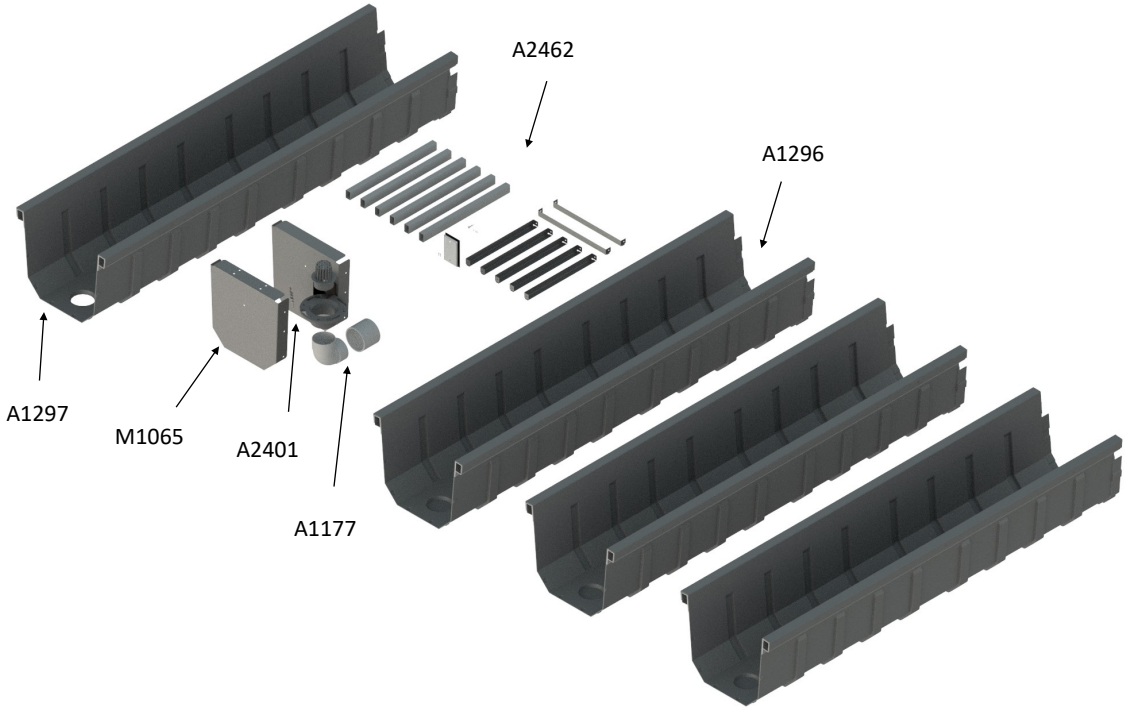

A2400 A2462	Polymer Housing Assembly 24’ (order mounting kit separately) Polymer Housing Hardware Kit 24’ (order mounting kit separately)
A2402 A2407	Polymer Housing Assembly 18’ (order mounting kit separately) Polymer Housing Hardware Kit 18’ (order mounting kit separately)
A2408	Polymer Housing 6’ Extension w/ Splice
A2404	Polymer Housing 311 Mounting Kit UT (for VL pools)
A2405	Polymer Housing 311 Mounting Kit UT (for gunite pools)
A2403	Polymer Housing 311 Mounting Kit RT (for gunite or VL pools)
A2849 A2850	Polymer Housing 311 Mounting Kit UT (for fiberglass pools) Polymer Housing 311 Mounting Kit UT (for fiberglass pools) w/ Standoff Brackets
A3430 A3551	Housing Turnbuckle Backfill Brace Housing Turnbuckle Brace Set of 5

Note: Some parts may be discontinued or limited stock

© Latham Pool Products, Inc. 2022 All rights reserved.

Aluminum Bench

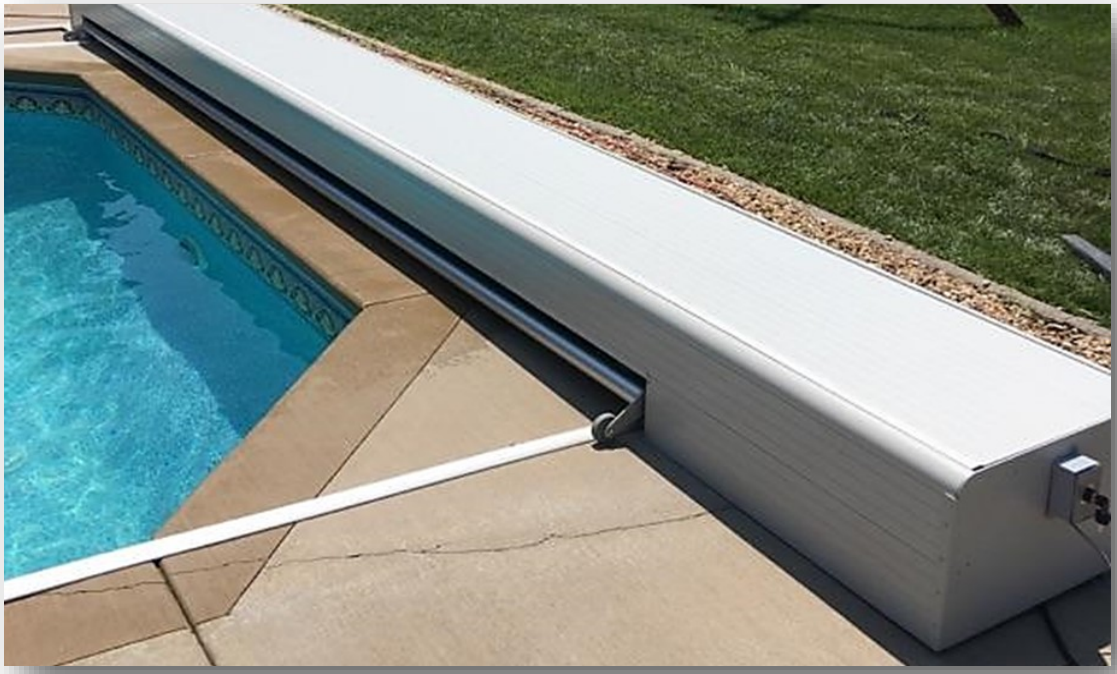

A3358	Aluminum Bench 23” Wide 24’ Long
A3385	4’ Bench Extension Kit for A3358
A3380	Aluminum Bench 23” Hardware Kit
M1051	Aluminum Bench 23” Bracket
M1053	Aluminum Bench Attachment Bracket

© Latham Pool Products, Inc. 2022 All rights reserved.

Deck Mount Plastic Housings

A0240	Housings Plastic GRAY LEFT/ RIGHT SET
H9590	Deck Mount Motor End Cover GRAY
H9650	Deck Mount Non-motor End Cover GRAY

© Latham Pool Products, Inc. 2022 All rights reserved.

Slider Assemblies

SL22039	Slider, 2” Extended Universal
SL22049	Slider, Universal
SL22070	Slider, 6” Under Track (Used on 4” Leading Edge)
SL22071	Slider, 6” Slip-in Outside Slider (Used on 4” Leading Edge)
SL22438	Slider, Universal 1.5” Extended
SL22645	Slider, Short Rectangle
SL22727	Slider, Under Track Snap-in
SL22452	Slider, Molded Top Track
SL22310	2.5 x 4.5 LE Slider Assembly (Used on Rectangle Leading Edge)
A3525	403 Slider 2.5” LE SET
M3625	403 Detachable Slider

© Latham Pool Products, Inc. 2022 All rights reserved.

Slider Comparison Chart

	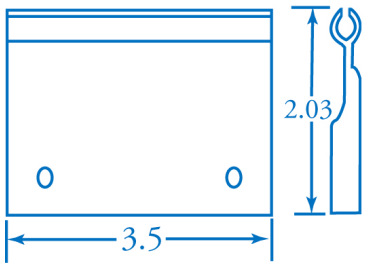	**22645** Rectangular Short Slider. This is the new replacement for the Snap-in Slider. (Used: 2006 to Present)
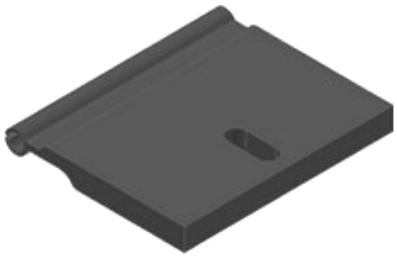	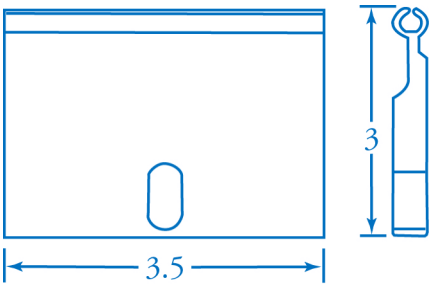	**22049** Universal TT Slider. (Used: 1995 to Present)
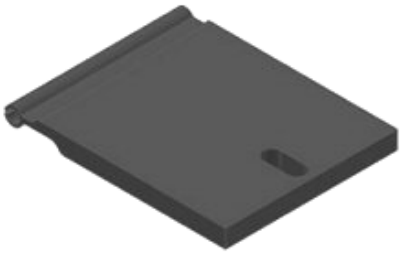	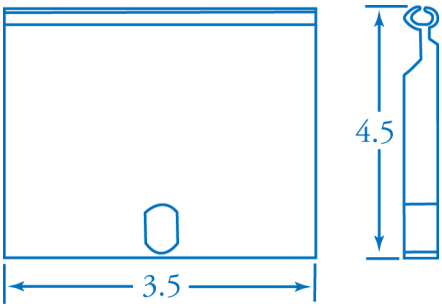	**22438** 1-1/2” Extended TT Slider. (Used: 2000 to Present)
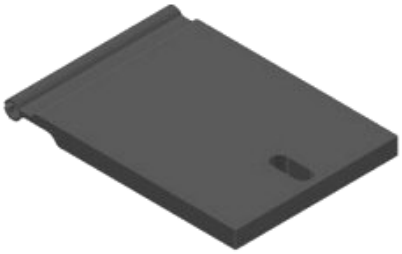	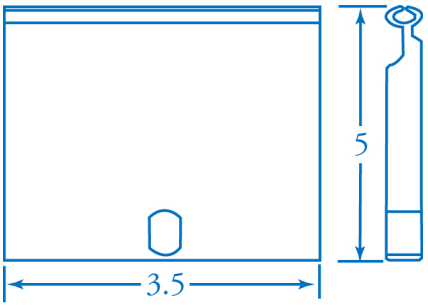	**22039** 2” Extended TT Slider. (Used: 2000 to Present)
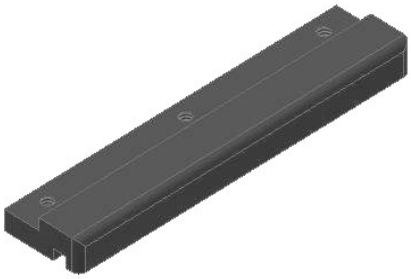	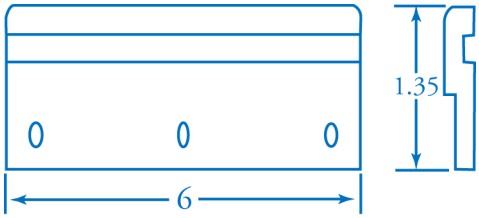	**22111** 4” LE Snap-in Slider Used with 4” Leading Edge. (Used: 2008 to Present)

© Latham Pool Products, Inc. 2022 All rights reserved.

Slider Comparison Chart

	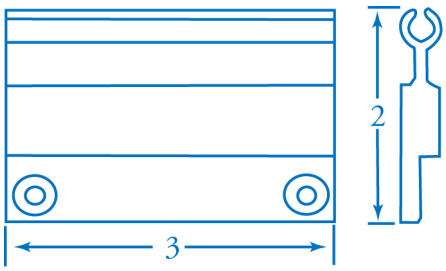	**22646** Triangular Slider, used primarily outside of Utah. (Used: 2002-2004)
	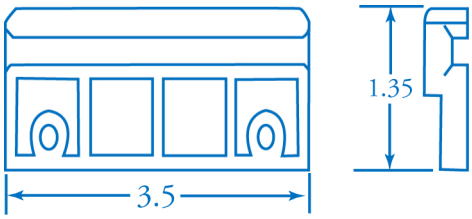	**22727** Standard Outside Slider. (Used: 2006 to Present)
	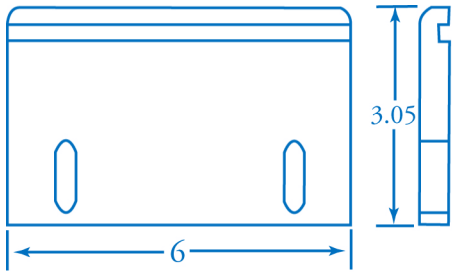	**22071** Slip-in Outside Slider used on 4” LE. (Used: 2000 to 2008)
	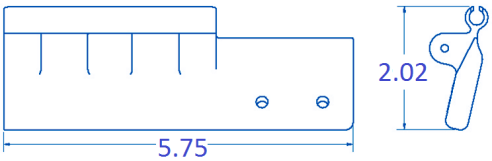	**22452 - (L or R)** Molded TT Slider for 4” LE. Side-specific, a pair of these is included with TT2009 and TT2010. (Used: 2009 to Present)

© Latham Pool Products, Inc. 2022 All rights reserved.

Slider Comparison Chart

	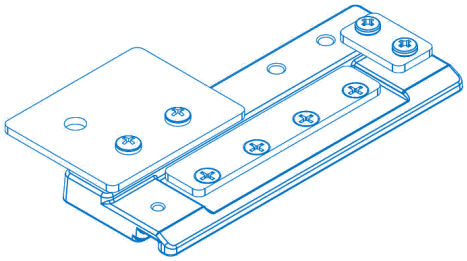	**A3411** (Left) **A3410** (Right) This is the new slider for the 403 track with a 2.5 leading edge. **(Used: 2018 to Present)**
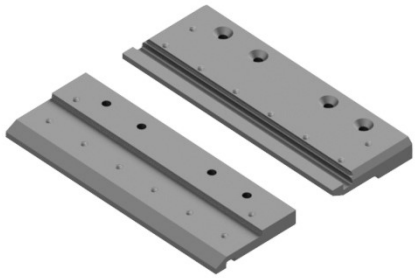	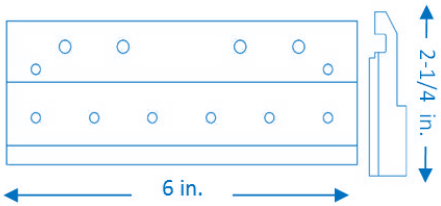	**M3625 - UT Detachable Rope Slider** This is the new 403 UT Detachable Rope Slider. **(Used: 2018 to Present)**

© Latham Pool Products, Inc. 2022 All rights reserved.

Track & Hardware for TT Systems

	54817D 54817	Universal Top Track, Drilled 22 ft. Universal Snap-down Top Track, 22 ft. (Used with Snap-locks, Not Pre-drilled)
	TT2042	Top Track Installation Kit
	TT1010	Top Track Speed Guide Kit SS
	SN1000	Snap-down Top Track Kit
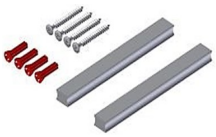	TT22003	Top Track Splice Kit
	TT1020	Top Track SS Pulley Cartridge SET

© Latham Pool Products, Inc. 2022 All rights reserved.

Track & Hardware for Under Track Systems

	X0614 X0820 X0674 A1039 A1040 A1058	Track UT 403 for Detachable Rope 21’ (no mounting holes) Track UT 403 for Detachable Rope 21’ (w/ mounting holes) Track UT 403 for Detachable Rope 21’ BRONZE Track Conversion Package UT 20’ LE (2-1/2”) Track Conversion Package UT 24’ LE (2-1/2”) Track Conversion Package UT 403 TL 42’, 20’ LE
	X0765	Protector for Encapsulated Track, Covers Track Face During Construction 21 ft
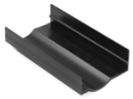	X0666	Protector for UT 403 & 801 Rigid PVC Covers Track During Construction 21 ft
	A1923	Splice Kit for Track UT 403
	A0407	Bracket Encapsulated UT w/ Screws, Anchors & Nuts SET
	A0958	Pulley Endcap Assembly Twist Lock UT 817
	A0996 A3635	Guide Feed UT 801/403 STD w/ Hardware Each Guide Feed UT SET 418
	A1792	UT Encapsulation Track Hardware Kit
	A1793	UT Screw-on Track Hardware Kit
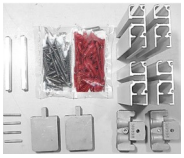	A0953	Track Package UT 403 for Detachable Rope (4 guides, pulleys, guide feed, etc.)

© Latham Pool Products, Inc. 2022 All rights reserved.

Replacement Parts Pre - 2018
Under Track Systems

	55031	Standard Under Track for Retainer 22 ft.
	UT1010	Under Track SS Speed Guide Kit
	UTO2500	Under Track Installation Kit For Retainer Track
	UTO1500	Under Track Installation Kit For Drill-up Track
	UT1013	Under Track Split Guide Kit For Old Style 2 Channel Track, Plastic
	UTO3000	Under Track Splice Kit Used with 55063 Drill-up Track
	UTO1800	Under Track SS Pulley Cartridge Assembly
 	54821 22001	Under Track (2 Channel Drill-up Style) 22 ft. Under Track Splice 6 in. (Used w/ 54821)

© Latham Pool Products, Inc. 2022 All rights reserved.

Hydraulic Motors & Controllers

	A0572 A0573	Hydraulic Power Pack Complete US 220V 121 Hydraulic Power Pack Complete IEC 240V 121
	44100	Hydraulic LSHT Torque 130CC Drive Motor (Pin Hole)
	44101	Hydraulic Pinhole Motor
	A0577 A0578	Hydraulic Control Board US/CA Field Replacement Kit 121 Hydraulic Control Board Int'l Field Replacement Kit 121
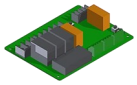	E1139	Hydraulic Feature Control Module
	A3481	Multi Valve Board
	E1161	Hydraulic Control Board Compatible w/ 24DC Solenoid 121
	10730	2012 Aux Relay Control Board (110-240V) Used in Hydraulics 2013-2016

© Latham Pool Products, Inc. 2022 All rights reserved.

Standard Motors & Controllers

	A0570 A0575	Standard Motor w/LV Control 3 Wire 110V 121 HD Motor w/LV Control 3 Wire 110V 121
	A3361	Standard 3 Wire Motor with Limit Control
	A3505	Motor Standard 3 Wire w/ Limit Switch Sensors
	A3552	230V 2018 Motor w/ Feature Controls
	A0576 E1058	Tuck-Under Motor w/LV Control 3 Wire 110V 121 Gear Motor 3/4HP 3 Wire Tuck Under Bison
	A3507	Motor Tuck Under w/ Limit Switch Control Mini Infinity 2
	A0580 A0579	Electric Motor Control Board Int'l Field Replacement Kit 121 Electric Motor Control Board US/CA Field Replacement Kit 121
	E1160	Motor Control Board for Electric Motors 121
	A3360	3 Wire Limit Control & Sensor
	HE1000	Hall Effect Sensor Kit
	10728	2012 Electric Motor Smart Control Board 110V - 240V
	IN1128	Water Feature Interrupter
	IN1129	Water Pump Interrupter 2012
	10730	Aux Relay Control Board 110V - 240V (Used in Hydraulics 2013-2016)

© Latham Pool Products, Inc. 2022 All rights reserved.

System Switch Assemblies

IN1103	IDEC Key Switch, Full Assembly
IN1104	IDEC Key Switch Assembly w/out Box
ID1103	IDEC Key Switch
TP2500	Touch Sensitive Touch Pad, Full Assembly
A0609	Toggle Rocker Control Switch Assembly
A2469-B A2519-B A2570 A2523-B A2525-B	HV Touch Pad LV Touch Pad Touch Screen Controller LV Touch Pad Remote Module Remote Touch Pad Host Assembly

© Latham Pool Products, Inc. 2022 All rights reserved.

Other Manufacturer’s Hardware

	A3660	Bar-Lock Slider Assembly
	A1100	Coverstar Slider Assembly For Detachable Rope SET
	RP1036 RP1037	Cover Pools UT Slider w/ Plate LEFT Cover Pools UT Slider w/ Plate RIGHT
	A4020	Cover Pools Rotary Encoder Assembly
	11002	Cover Pools Sensor, Hamlin N.C.
	RP1003	Cover Pools Guide UT Pair
	RP8075	Aquamatic Universal Screw-on Slider w/ 4 screws
	RP8073 RP8074 RP8064 RP8063	Aquamatic TT Guide Feed LEFT Aquamatic TT Guide Feed RIGHT Aquamatic UT Guide Feed LEFT Aquamatic UT Guide Feed RIGHT
	A1153	Coverstar UT Slider Assembly Set Pre 403/801 White
	M9886	Coverstar TT Stop Block/Slider for Wheel assembly Each 403 Locks into Track
	22035	Pool Saver Under Track Guide Pair

© Latham Pool Products, Inc. 2022 All rights reserved.

Lid and Bench Brackets

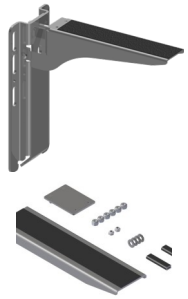	A1932 Lid Bracket adj. arm 13” Walk-on & Base SS A0507 Lid Bracket adj. arm 12” Walk-on STONE Lid 7.5” Base Aluminum A1421 Lid Bracket adj. Assembly 13” Walk-on with 7-1/2” Base Aluminum A3326 Lid Bracket Width Extension Kit SS 418 A2393 Lid Bracket Ext Kit 15 - 17” SS 11.75” Long A2364 Lid Bracket Ext Kit 17 - 19” SS 13.75” Long A2376 Lid Bracket Ext Kit 19 - 21” SS 15.75” Long A2365 Lid Bracket Ext Kit 21 - 23” SS 17.75” Long A2392 Lid Bracket Ext Kit 23 - 25” SS 19.75” Long
	A0151 Lid Bracket Walk-on HD SS 3/8” Specify Size (custom order)
	M4105 Standard Under Track Lid Bracket
	M4106 Standard Top Track Lid Bracket
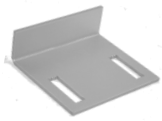	M3970 Lid Bracket Walk-on End 5” Aluminum
	M3806 Lid Bracket Walk-on End 10” Aluminum
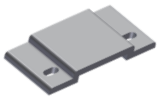	55041 Drop-in Lid Mount 10 ft 22662 Extended Drop-in Lid Mount, 5/16” Slots
	A2409 Lid Bracket w/ Bolt for 309 Riser Panel (X0944) SS for 14” Box A2415 Lid Bracket w/ Bolt for 309 Riser Panel (X0944) SS for 12-5/8” Box
	A3409 Lid Bracket w/ Bolt for 419 Zero Reveal Flush Lid Riser
	A0231 Bench Bracket Center 14” High 21” Wide (1 week ship) A0008 Bench Bracket Center 15” High 19” Wide (1 week ship) A0154 Bench Bracket Center 15” High 21” Wide (1 week ship) A0002 Bench Bracket Custom Size (1 week ship)

© Latham Pool Products, Inc. 2022 All rights reserved.

Aluminum Lid for TT & UT Systems

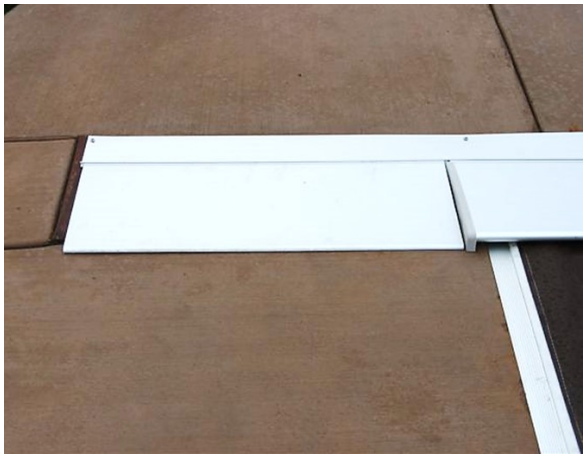

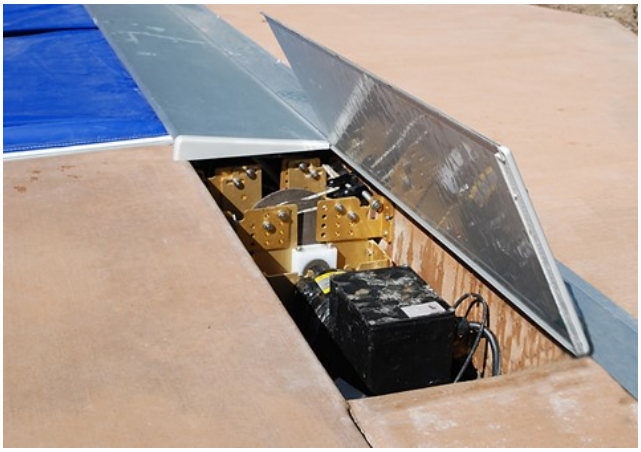

X0004 X0817	Lid Aluminum 11” STD Per ft. Lid Aluminum STD 20’ 4” Piece
X0121 X0659	Lid Aluminum Motor End Per ft. Lid Non-motor End Aluminum Per ft.
X0943 X0951	Lid Hinge 8” Aluminum 24 ft. Lid Hinge 8” Aluminum Per ft.
A0376	Lid Wedge Set of 2
A0025 A0026	Lid Kit Aluminum, 8” Hinge for 20’ Track Space UT Lid Kit Aluminum, 8” Hinge for 20’ Track Space TT
A1784	Lid Hinge Attachment Hardware Kit
A0375	Lid Endcap Set of 2

Note: Some parts may be discontinued or limited stock

© Latham Pool Products, Inc. 2022 All rights reserved.

Flush Lid for TT & UT Systems

A3560 A3570	Flush Lid Kit 403 PCS Reusable Forms Flush Lid Kit 403 PCS 1 pc Encapsulation
X0008 X0009	6” Flush Lid Panel Snap 7-1/2” Flush Lid Panel Snap
A2410 A2412 A2413 X0944	Riser Box End Assembly 309 for 14” Box Riser Box End Assembly 309 for 12-5/8” Box Riser Box End Assembly 309 for 15-1/2” Box Flush Lid Riser 309 - 24’ Gray
M9354	Riser Panel 309 Cut to fit Coping Transition Profiles 40” Long Notch on Both Ends
A2414	Flush Lid 309 Hardware Kit
A2896 A2895	Lock Assembly for Flush Lid Kit (Includes 2 locks) Lid Lock Kit for Zero Reveal Flush Lid

© Latham Pool Products, Inc. 2022 All rights reserved.

Flat Lid for TT and UT Systems

A2432 A2433 A2434 A2431	Lid Kit Flat 309 for TT 14” Box 24’ Long (includes lid brackets) Lid Kit Flat 309 for UT 14” Box 24’ Long (no brackets) Lid Kit Flat 309 for UT 14” Box 24’ Long w/ steel lid brackets Lid Kit Flat 309 for UT or TT 14” Box 4’ Extension Kit
X0939	Flat Lid 309 Hinge 24 ft
X0940	Flat Lid 309 Lid Panel to Hinge Attachment 24 ft
A3426	Flat Lid Endcap - for Snap Panels SET
A3425	Flat Lid Wedge - for Snap Panels SET
A2427 A2428 A2429	Flat Lid 309 End Support Assembly LEFT for 14” Box Flat Lid 309 End Support Assembly RIGHT for 14” Box Flat Lid 309 End Support Assembly for 14” Box SET
M9363	Flat Lid 309 Cut Cover for 14” Box
M9362	Splice for Flat Hinged Lid 309
X0053	Metal Box C-Cap

© Latham Pool Products, Inc. 2022 All rights reserved.

Walk-on Tray Lid Aluminum

A0189	Lid Tray Walk-on Aluminum Mesh 14” x 23-3/4” (side w/ lip) 1 week
A0229	Lid Tray Walk-on Aluminum Mesh 24” x 23-3/4” (side w/ lip) 1 week
A0230	Lid Tray Walk-on Aluminum Mesh 17-3/4” x 24” (side w/ lip) 1 week
A0052	Lid Tray Walk-on Aluminum Custom Size Specify Dimensions 1 week

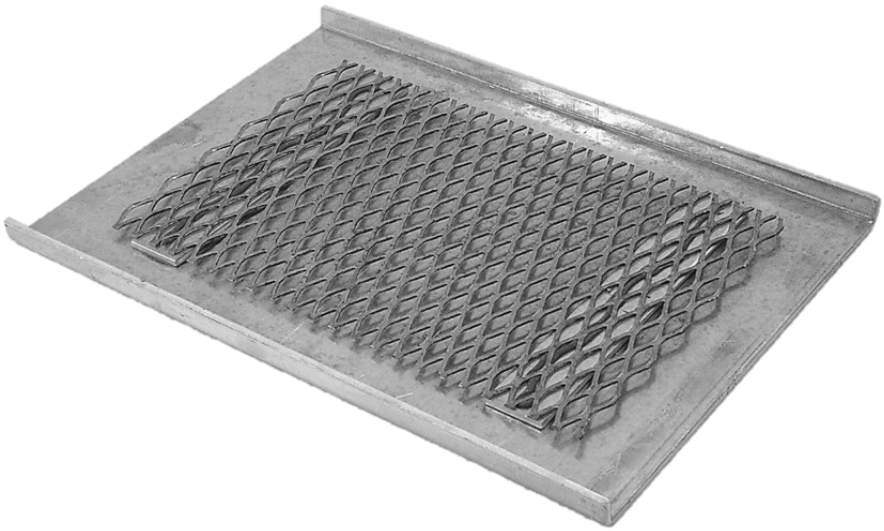

© Latham Pool Products, Inc. 2022 All rights reserved.

Box Perimeter & Lid Forming

A1125	Box perimeter forming encapsulation and brackets kit for VL pool, 14 in. box up to 24 ft. Use w/ box perimeter forming kit
A1419	Box perimeter forming encapsulation and brackets kit for variable lid thicknesses gunite pool 14 in. box up to 24 ft. (Consumables) Use when lid thickness requires vertical adjustment
A1489	Box perimeter forming encapsulation and brackets kit for Gunite pool 14 in. box up to 24 ft. (Consumables) Use with box perimeter forming kit
A1532	Box perimeter forming encapsulation and brackets kit for Gunite pool 14 in. box 4 ft. add-on extension kit
A1150	Box Perimeter Reusable Forming Kit 2-1/2 in. Used w/ 1 Piece Coping Forms 24’ Box (order lid perimeter encapsulation and brackets separately)
X0695	Box form 2-1/2 in. vertical extrusion 6 ft. length

© Latham Pool Products, Inc. 2022 All rights reserved.

Lid Forming Molds & Kits - Inclined

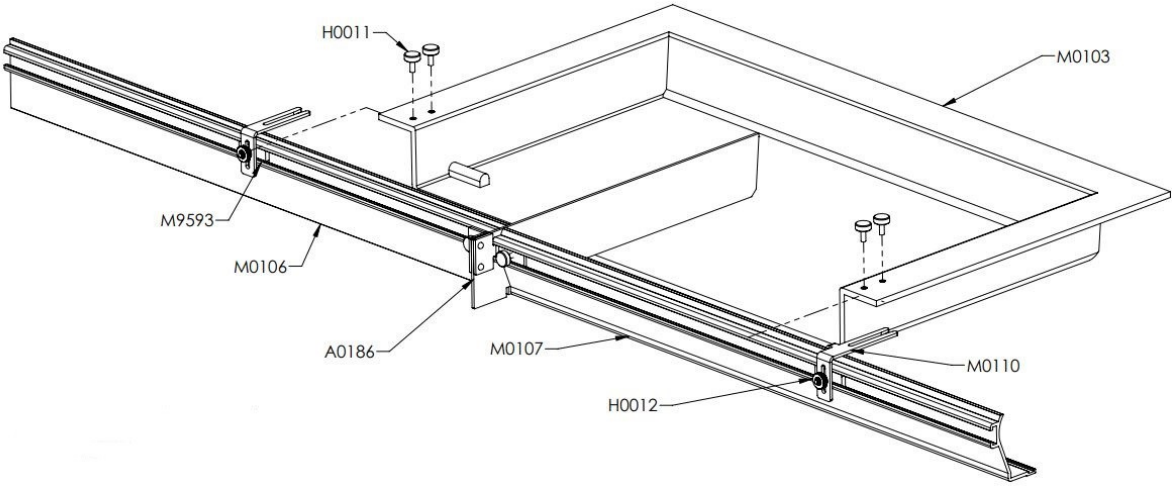

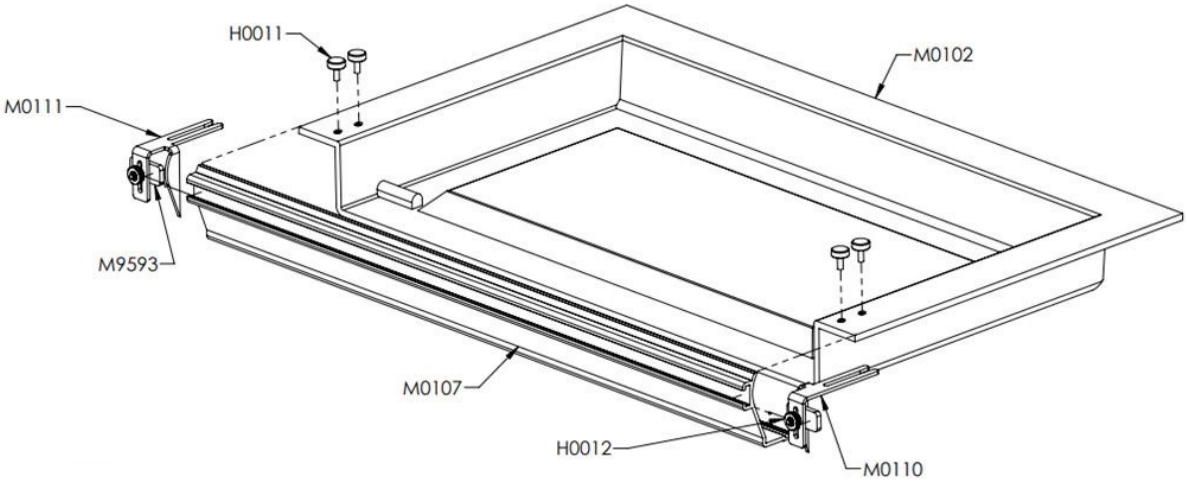

A1021	Inclined Formed Lid Mold
A1028	Lid Forming Inclined Adjustable Divided Mold
M0110	Inclined Lid Forming Retainer Bracket RIGHT
M0111	Inclined Lid Forming Retainer Bracket LEFT
M0107	403 Inclined Deck Form 28” L (X0743)
A2275	Inclined Lid Forming Kit
A1119	Box Perimeter & Lid Forming Inclined 1 Piece

© Latham Pool Products, Inc. 2022 All rights reserved.

Lid Forming Molds & Kits - Cantilever

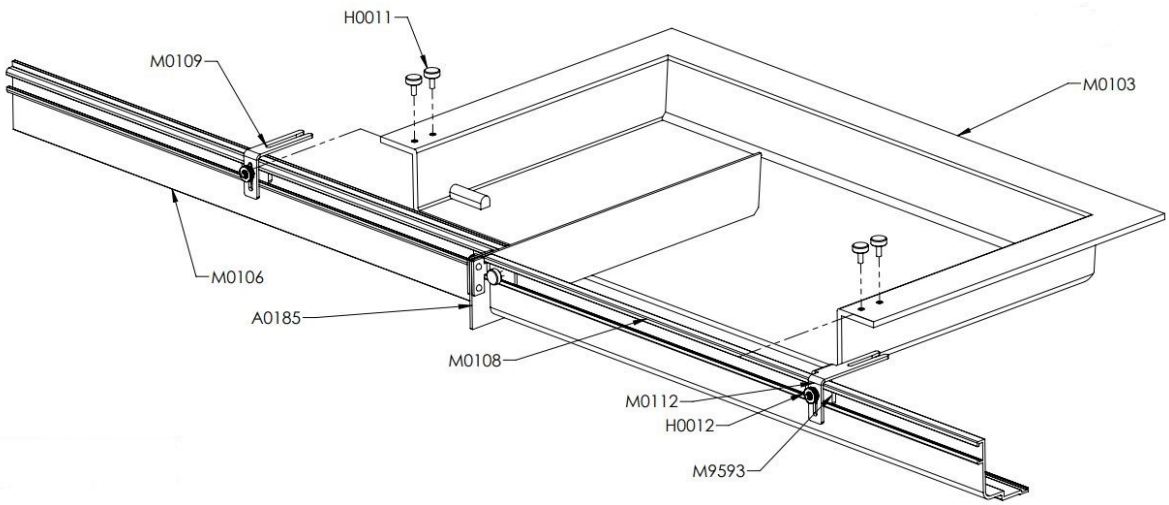

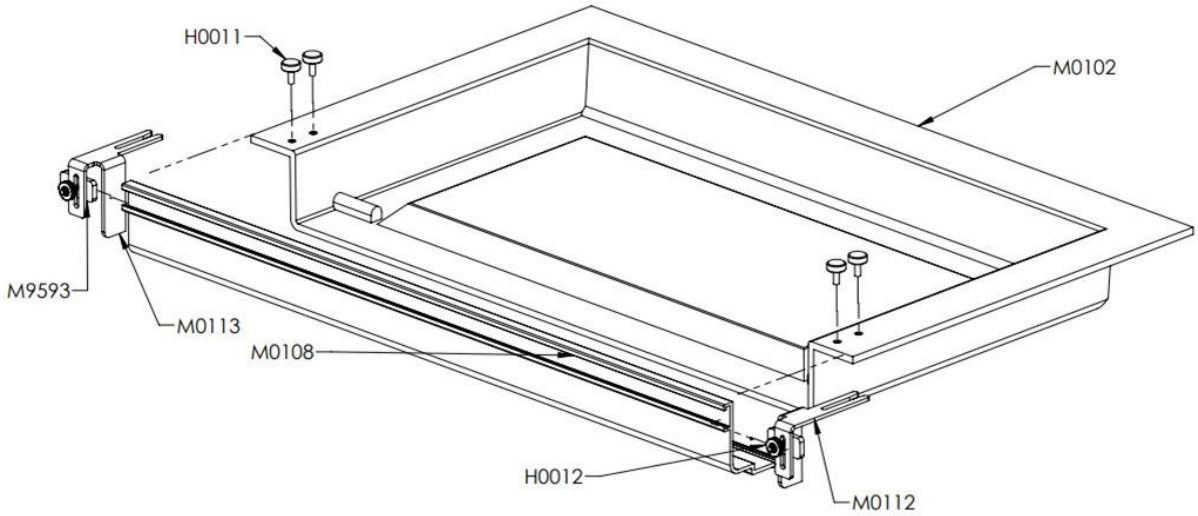

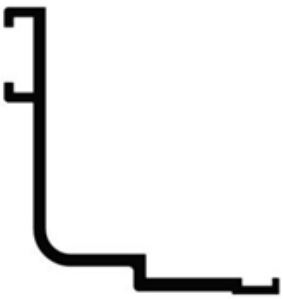

A1024	Cantilever Formed Lid Mold
A1027	Lid Forming Cantilever Adjustable Divided Mold
M0112	Cantilever Lid Forming Retainer Bracket RIGHT
M0113	Cantilever Lid Forming Retainer Bracket LEFT
M0108	403 Cantilever Deck Form 28” L (X0719)
A2276	Cantilever Lid Forming Kit
A1120	Box Perimeter & Lid Forming Cantilever 1 Piece

© Latham Pool Products, Inc. 2022 All rights reserved.

Lid Descenders & Transition Pieces UT

	A1752	Descender Kit NO PROFILE (Metal C-Cap) for Flush Lid Panels up to 20’ TS
	A1111 A1110 A1112	Descender Kit Bullnose for Flush Lid Panels up to 22’ TS Descender Kit Rounded for Flush Lid Panels up to 22’ TS Descender Kit Inclined for Flush Lid Panels up to 22’ TS
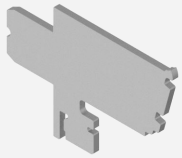	M9381	Coping Transition - Joins Inclined Coping to Riser 309
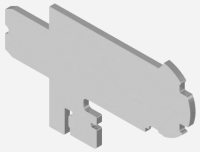	M9382	Coping Transition - Joins Bullnose Coping to Riser 309
	M0132	Coping Transition - Joins Rounded Coping to Riser 419
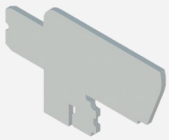	M9388	Coping Transition - Joins Inclined Reusable Coping Form to Riser
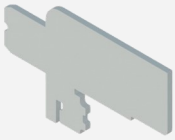	M9389	Coping Transition - Joins Cantilever Reusable Coping Form to Riser

© Latham Pool Products, Inc. 2022 All rights reserved.

Tubes & Leading Edges

	X0676 4” Aluminum Roll Formed Tube or LE 40 ft. X0015 4” Aluminum Roll Formed Tube or LE per ft. X0001 Tube 6” Aluminum STD per ft. X0677 Tube 6” Aluminum STD 40 ft. A0436 Tube Insert Aluminum w/ screws for 4” LE EA A1796 Tapered Tube Insert for 6 inch Tube Repair Kit EA
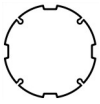 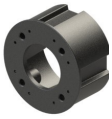	X0672 Tube 6” Extruded Clear Anodized 28 ft. X0673 Tube 6” Extruded Clear Anodized 20 ft. A3710 Tube 6” Extruded Tube Splice Kit 72 in. A1405 Tube Insert w/ screws - 4.7” Extruded Composite EA
	A0796 Tube Insert for Extruded 6” Tube w/ Screws EA M9538 Composite 6” Extruded Tube Insert, for old Keyed Tube EA
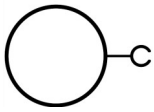	54806-20 Extruded Aluminum Leading Edge 2-1/2” x 19’3” 54806-24 Extruded Aluminum Leading Edge 2-1/2” x 24’
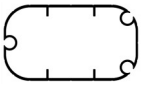 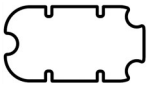	X0007 Leading Edge Tube 2-1/2” Anodized 20 ft. X0024 Leading Edge Tube 2-1/2” Anodized 24 ft. X0451 Leading Edge Splice 2-1/2”
	M3315 LE Support Raises 2-1/2” LE 1 inch M3316 LE Support Raises 2-1/2” LE 2 inches

© Latham Pool Products, Inc. 2022 All rights reserved.

Flush Track Kits and Hardware

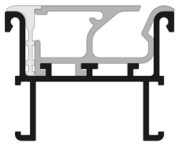	A2123 Recessed Horizontal Track Kit w/ shim Gray 22 ft. X0849 Track Housing Bottom Piece Gray 22 ft. X0850 Track RHT Top Piece Gray 22 ft. X0847 Spacer Shim Gray 22 ft.
	A2143 Track package RHT 308 (4 guides, pulleys, guide feed, etc.) GRAY A2145 Track Package RHT 308 w/ Protector (4 guides, pulleys, guide feed, etc.) A2200 Parts Kit Track Hardware for RHT 308 (Endcaps, guide feed, etc.) GRAY A2141 Pulley Endcap RHT 308 (recessed horizontal L & R) GRAY A0257 Guide Feed RHT-S (Screw-down) SET X0865 Protector for RHT 308 22’ White
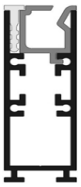	A0021 Slim Flush Track Kit X0585 Slim Flush Vertical Track Housing X0586 Slim Flush Vertical Track X0587 Slim Flush Spacer Shim Gray 22 ft.
	A0009 Slim Flush Track Hardware Kit A0004 Slim Flush Track - Guide Feed Assembly A0005 Slim Flush Track - End Pulley Assembly A0006 Slim Flush Track - Guide Feed with Pulley M9797 Stop TT 403 L Shaped SS M0015 Slim Flush Track Splice
	X0117 Recessed Horizontal Track Screw-down Pre-drilled 22 ft. A0826 Track and Housing RHT-S, Screw-down 22 ft. X0331 Housing RHT-S, C-Channel Plastic EA
	A0825 Track Package RHT-S Screw-down (4 guides, pulleys, guide feed, housing) A1794 Top Track Horizontal Flush Deck, Screw-down Hardware Kit A1496 Pulley Endcap Assembly RHT-S Screw-down SET Rev. 305
	A2368 RHT 308 Curved Track, Housing, Splice 3’ Set of 2 GRAY

© Latham Pool Products, Inc. 2022 All rights reserved.

Reusable Coping Forms and Kits

X0743	Coping Form 403 Inclined 6 ft.
A1578	Coping Form 403 Inclined 6 ft. w/ Splice & 3 Spacers
A1735	Coping Form Hardware Kit 403 for Inclined 1 pc
A1252	Coping Form Kit 403 Reusable Inclined 20 x 40
A1254	Coping Form Kit 403 Reusable Inclined 22 x 50

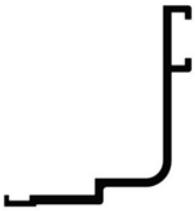

X0719	Coping Form 403 Cantilever 12 ft.
A1577	Coping Form 403 Cantilever 12 ft. w/ Splice & 3 Spacers
A0719	Coping Form 403 Cantilever 6 ft. for optimal shipping
A1736	Coping Form Hardware Kit for Cantilever
A1145	Coping Form Kit 403 Reusable Cantilever 20 x 40
A1253	Coping Form Kit 403 Reusable Cantilever 22 x 50

© Latham Pool Products, Inc. 2022 All rights reserved.

Vinyl Liner Coping & Encapsulation Kits

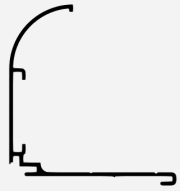	X1904 A1244 A1247 A0703 A1250	Clip-on Coping Rounded Edge 21’ Piece 222 Coping Clip-on Kit Rounded Edge 16 x 32 Coping Clip-on Kit Rounded Edge 18 x 36 Coping Clip-on Kit Rounded Edge 20 x 40 Coping Clip-on Kit Rounded Edge 22 x 50
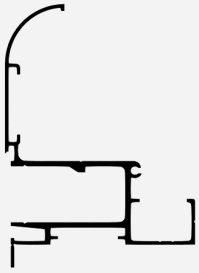	X1955 X1954 A6021 A6022 A6023 A6024 A6025 A6026 A6027	Coping Rounded 16’ 2” Piece 521 Coping Rounded 8’ 1” Piece 521 Encapsulation Kit 10 x 20 One Piece Rounded 521 Encapsulation Kit 12 x 24 One Piece Rounded 521 Encapsulation Kit 14 x 28 One Piece Rounded 521 Encapsulation Kit 16 x 32 One Piece Rounded 521 Encapsulation Kit 18 x 36 One Piece Rounded 521 Encapsulation Kit 20 x 40 One Piece Rounded 521 Encapsulation Kit 22 x 50 One Piece Rounded 521
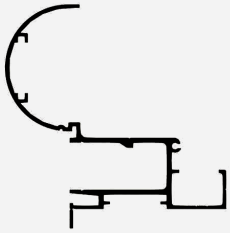	X1947 X1948 A6016 A6017 A6018 A6019 A6020	Coping Bullnose 16’ 2” Piece 521 Coping Bullnose 8’ 1” Piece Encapsulation Kit 12 x 24 One Piece Bullnose 521 Encapsulation Kit 16 x 32 One Piece Bullnose 521 Encapsulation Kit 18 x 36 One Piece Bullnose 521 Encapsulation Kit 20 x 40 One Piece Bullnose 521 Encapsulation Kit 22 x 50 One Piece Bullnose 521
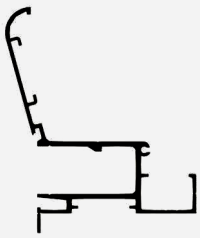	X1956 X1957 A6028 A6029 A6030 A6031 A6032	Coping Inclined 16’ 2” Piece 521 Coping Inclined 8’ 1” Piece 521 Encapsulation 12 x 24 One Piece Inclined 521 Encapsulation 16 x 32 One Piece Inclined 521 Encapsulation 18 x 36 One Piece Inclined 521 Encapsulation 20 x 40 One Piece Inclined 521 Encapsulation 22 x 50 One Piece Inclined 521
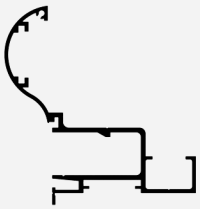	X1870 X1871 A6047 A6048 A6049 A6050	P-Shaped One Piece 16’ 2” 521 P-Shape 8’ 1” Piece 521 Encapsulation Kit 16 x 32 P-Shaped 521 Encapsulation Kit 18 x 36 P-Shaped 521 Encapsulation Kit 20 x 40 P-Shaped 521 Encapsulation Kit 22 x 50 P-Shaped 521

© Latham Pool Products, Inc. 2022 All rights reserved.

Vinyl Liner Encapsulation Kits & Quick-Snap Corner Options

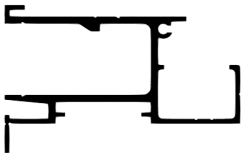

X2650	Encapsulation Vinyl Liner 21’ Piece 521
A6002	Encapsulation Kit 12 x 24 Vinyl Liner 521
A6003	Encapsulation Kit 16 x 32 Vinyl Liner 521
A6004	Encapsulation Kit 18 x 36 Vinyl Liner 521
A6005	Encapsulation Kit 20 x 40 Vinyl Liner 521
A6006	Encapsulation Kit 22 x 50 Vinyl Liner 521

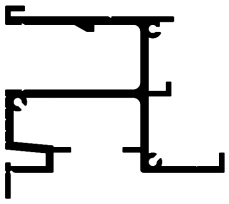

X0420	Encapsulation Raised Vinyl Liner 21’ Piece 1218
VLR4001	Raised Vinyl Liner Encapsulation Kit 12 x 24
VLR4002	Raised Vinyl Liner Encapsulation Kit 16 x 32
VLR4003	Raised Vinyl Liner Encapsulation Kit 20 x 40
VLR4004	Raised Vinyl Liner Encapsulation Kit 22 x 50

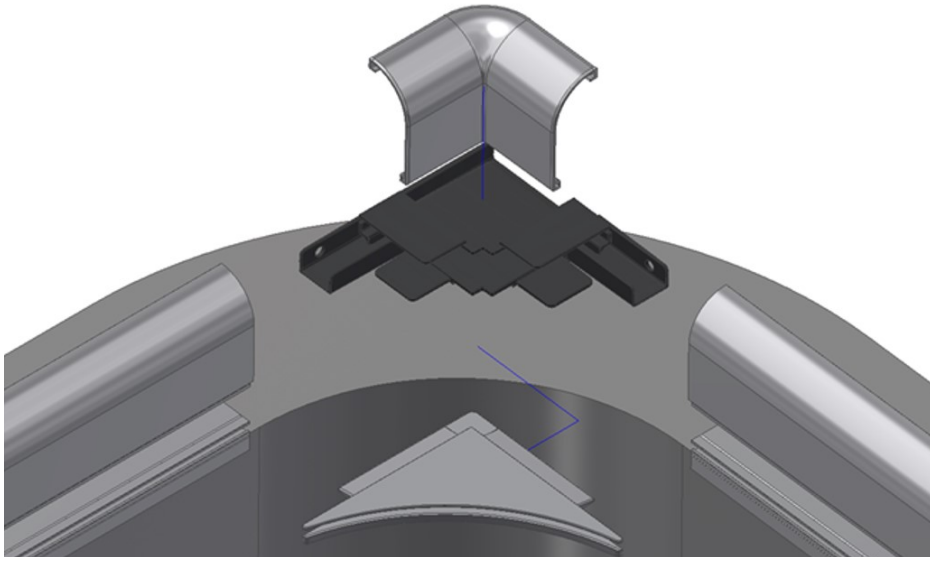

A0460	Quick-Snap Corner 2 ft Radius VL Kit 521 (4 radius inserts, 2 corner pockets)
A0459	Quick-Snap Corner 3 in Chop VL Kit 521 (4 chop inserts, 2 corner pockets)
A0458	Quick-Snap Corner 6 in Radius VL Kit 521 (4 radius inserts, 2 corner pockets)
M8085	Quick-Snap Corner VL Encapsulation Corner Pocket EA
M8098	Quick-Snap Corner 3 in Chopped VL Insert EA
22666-QGR	Quick-Snap 2 ft Radius Corner (Quartz Gray) EA

© Latham Pool Products, Inc. 2022 All rights reserved.

Corner Options - VL Encapsulation

A2103	Corner One Piece Rounded 2’ Radius ME LEFT
A2102	Corner One Piece Rounded 2’ Radius ME RIGHT
A2104	Corner One Piece Rounded 2’ Radius NME
A2154	Corner One Piece Rounded 3” Chopped ME LEFT
A2153	Corner One Piece Rounded 3” Chopped ME RIGHT
A2155	Corner One Piece Rounded 3” Chopped NME
A2108	Corner One Piece Rounded 6” Radius ME LEFT
A2107	Corner One Piece Rounded 6” Radius ME RIGHT
A2109	Corner One Piece Rounded 6” Radius NME
A2192	Corner One Piece Rounded 90 Degree ME LEFT
A2193	Corner One Piece Rounded 90 Degree ME RIGHT
A2105	Corner One Piece Rounded 90 Degree NME
A4102	Corner Kit 2’ Radius for Vinyl Liner 4 Corners 418
A4101	Corner Kit 3” Chopped for Vinyl Liner 4 Corners 418
A4100	Corner Kit 6” Radius for Vinyl Liner 4 Corners 418
A3949	Corner 2’ Radius for Vinyl Liner ME LEFT 418
A3948	Corner 2’ Radius for Vinyl Liner ME RIGHT 418
A3947	Corner 2’ Radius for Vinyl Liner NME 418
A3946	Corner 2’ Radius for Vinyl Liner NME LEFT w/ Support Brace 418
A3945	Corner 3” Chopped for Vinyl Liner ME LEFT 418
A3944	Corner 3” Chopped for Vinyl Liner ME RIGHT 418
A3943	Corner 3” Chopped for Vinyl Liner NME 418
A3942	Corner 6” Radius for Vinyl Liner ME LEFT 418
A3941	Corner 6” Radius for Vinyl Liner ME RIGHT 418
A3940	Corner 6“ Radius for Vinyl Liner NME 418

© Latham Pool Products, Inc. 2022 All rights reserved.

Gunite & Fiberglass Encapsulation Kits

X1651	Encapsulation Gunite 21’ Piece 418
A5010	Encapsulation Kit 10 x 20 Gunite 418
A5011	Encapsulation Kit 12 x 24 Gunite 418
A5012	Encapsulation Kit 16 x 32 Gunite 418
A5013	Encapsulation Kit 18 x 36 Gunite 418
A5014	Encapsulation Kit 20 x 40 Gunite 418
A5015	Encapsulation Kit 22 x 50 Gunite 418

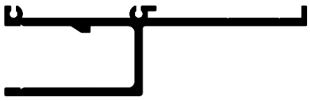

X0410	Encapsulation Cantilever Gunite 21’ Piece 1218
GRO4100	Gunite Cantilever Track Retainer Kit
GRO4100E	Gunite Cantilever Track Retainer Ext. Kit
GRO4101	Gunite Cantilever Retainer Kit (12 x 24)
GRO4102	Gunite Cantilever Retainer Kit (16 x 32)
GRO4103	Gunite Cantilever Retainer Kit (20 x 40)
GRO4104	Gunite Cantilever Retainer Kit (22 x 50)

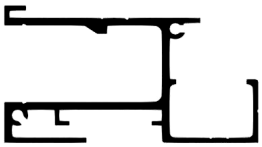

X2953	Encapsulation Fiberglass 21’ Piece 521
A6036	Encapsulation Kit 12 x 24 Fiberglass 521
A6038	Encapsulation Kit 16 x 32 Fiberglass 521
A6040	Encapsulation Kit 16 x 40 Fiberglass 521
A3523	Fiberglass 90 Degree NME Corner 418
A6034	Encapsulation Kit 20 x 40 Pool in Pool 521
A6035	Encapsulation Kit 22 x 50 Pool in Pool 521

© Latham Pool Products, Inc. 2022 All rights reserved.

Hardware for Encapsulation Kits

	X0091	Spacer for Encapsulation for VL & Fiberglass 21 ft.
	X0092	Spacer for Encapsulation - Gunite 21 ft.
	X0125	Encapsulation Filler Metal for 801 and 403, 10 ft.
	X1175	Encapsulation Filler Metal 121, 10 ft.
	A0407 A1729	Bracket Encapsulation UT Track Retainer SET Encapsulation Hardware Kit (Plastic anchors & screws)
	A1749 M9882	Coping Joint Clip Splice 2005 Inclined Coping 12 Pk Coping Joint Clip Splice 2005 Inclined Coping EA
	M8080	Coping Joint Clip Rounded Each 521
	A1748 M9881	Coping Joint Clip 805 Bullnose 12 Pk Coping Joint Clip 805 Bullnose Each

© Latham Pool Products, Inc. 2022 All rights reserved.

ManualTrak™ Drive Assembly

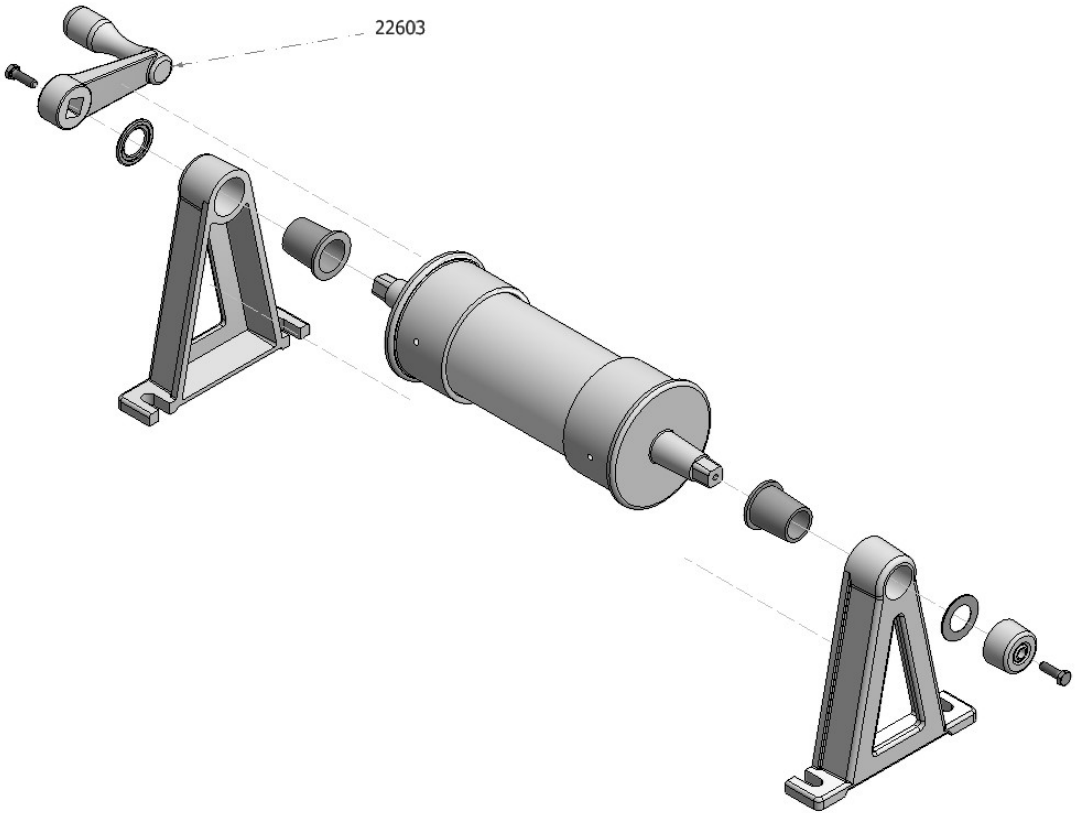

MANUALTRAK	ManualTrak™ Full System. Includes Tracks, Tubes and Installation Kits
H1003	Rocky Roller Mechanism
H0036	Rocky Roller Replacement Handle

© Latham Pool Products, Inc. 2022 All rights reserved.