COVERST*R

ECLIPSE™

2022
Parts Catalog

latham
The Pool Company

L0410 4.7.22

© Latham Pool Products, Inc. 2022 All rights reserved.

Table of Contents

Eclipse Mechanism Recessed Non-split Cone	3
Eclipse Mechanism DM Non-split Cone	4
Eclipse NME Recessed Assembly	5
Eclipse NME Deck Assembly	6
Eclipse ME Pulley Bracket Assemblies	7
Eclipse NME Pulley Bracket Assemblies	8
Eclipse Rope Reel Assembly	9
Eclipse Rope Reel Brake Assembly	10
Eclipse Caliper Torque Limiter	11
Eclipse NME Cone Brake Assembly	12
Lid and Bench Brackets	13
Classic Aluminum Lid for TT & UT Systems	14
Flush Lid for TT & UT Systems	15
Flat Lid for TT & UT Systems	16
Wheel Assembly TT for 2-1/2” LE	17
Wheel Assembly TT for 1” LE	18
Wheel Assembly TT for 3” LE	19
Roll-up Tubes & Leading Edges	20
Roll-up Tube & Leading Edge Inserts	21
Polymer Housing	22
Deck Mount Plastic Housing	23
Aluminum Bench	24
Rope & Semi-rigid Tab	25

Vanishing Edge System	26
Vanishing Edge Assembly & Hardware	27
Sliders	28
Track & Hardware for Deck Mount TT	29
Track & Hardware for Under Track	30
Flush Track Kits and Hardware	31
Other Manufacturer’s Hardware	32
Conversion Kits	33
Hydraulic Motors & Hardware	34
Motors & Motor Controllers	35
Electrical Controls	36
Reusable Coping Forms & Kits	37
2 Piece Reusable Coping Forms	38
Box Perimeter & Lid Forming	39
Lid Forming Molds - Inclined	40
Lid Forming Molds - Cantilever	41
Lid Descenders & Transition Pieces	42
Walk-on Tray Lids	43
VL Encapsulation Kits & Quick-Snap Corner	44
Corner Options - Vinyl Linrt	45
VL Coping & Encapsulation Kits	46
Gunite & Fiberglass Encapsulation Kits	47
Hardware for Encapsulation Kits	48

© Latham Pool Products, Inc. 2022 All rights reserved.

Eclipse Mechanism Recessed Non-split Cone

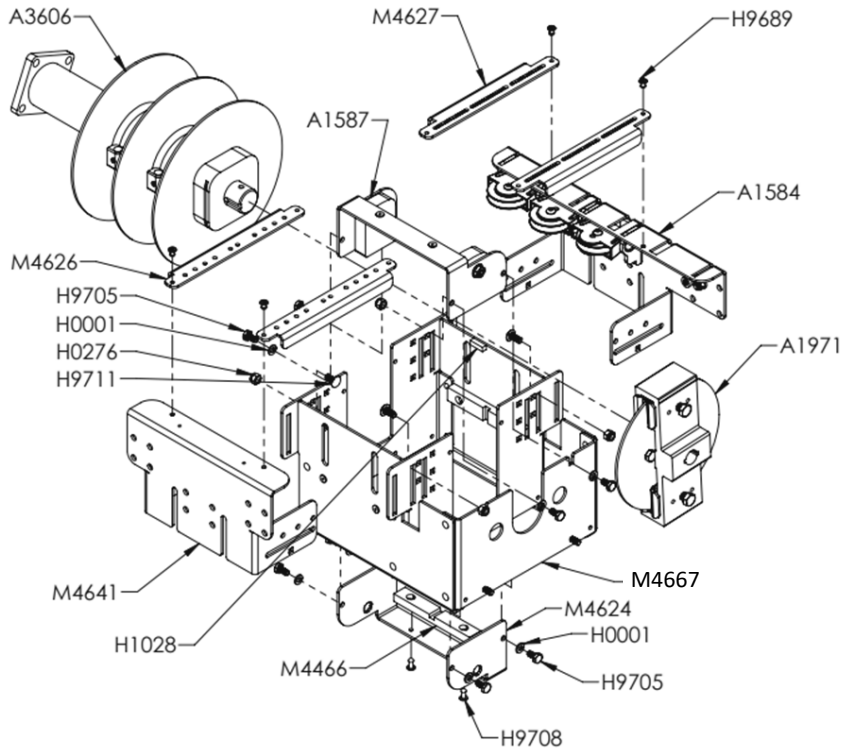

A3688

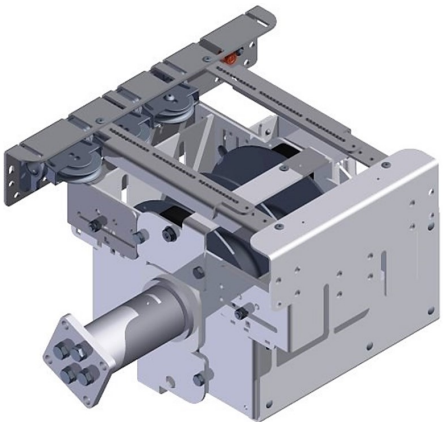

A3689

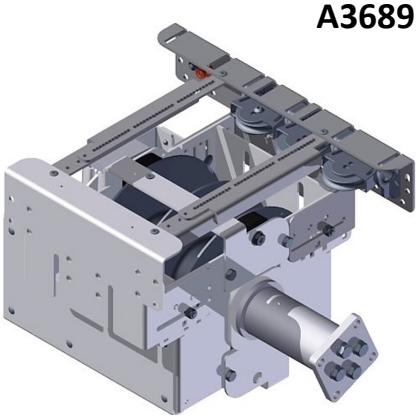

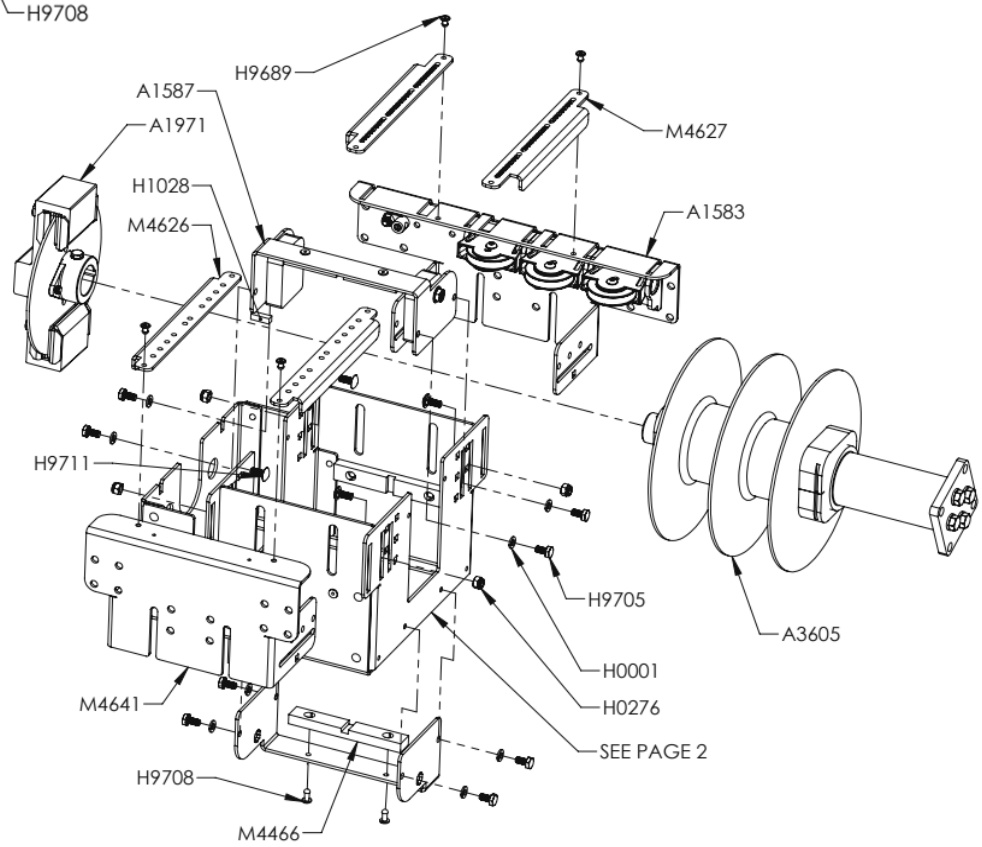

A3688	Eclipse Mechanism with Non-split Cone Recessed LEFT 214
A3689	Eclipse Mechanism with Non-split Cone Recessed RIGHT 214

© Latham Pool Products, Inc. 2022 All rights reserved.

Eclipse Mechanism Deck Mount Non-split Cone

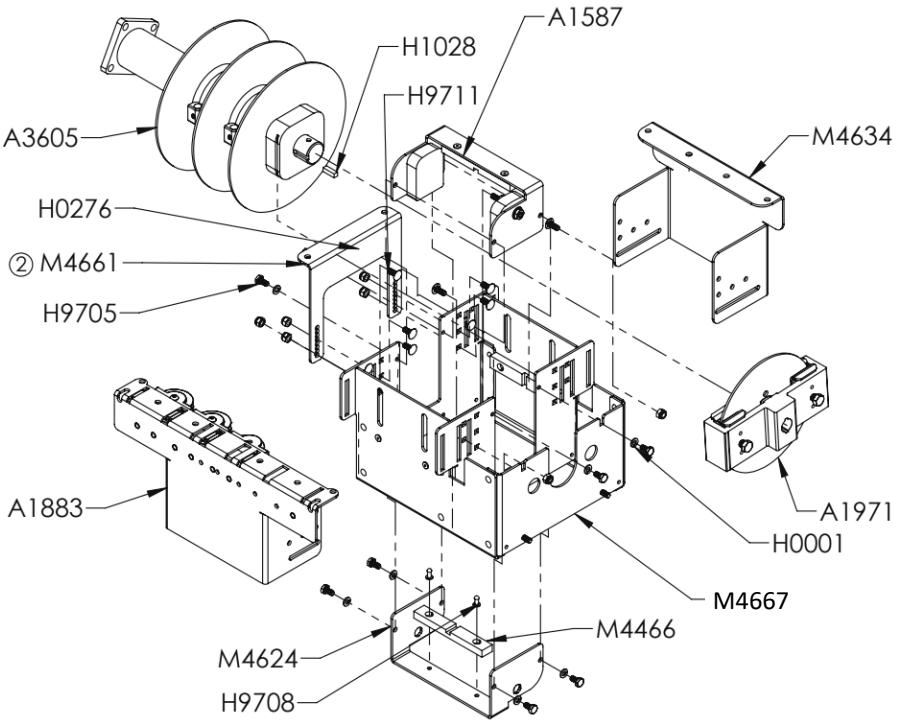

A3690

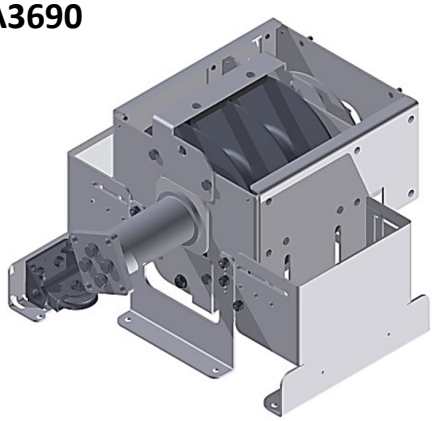

A3691

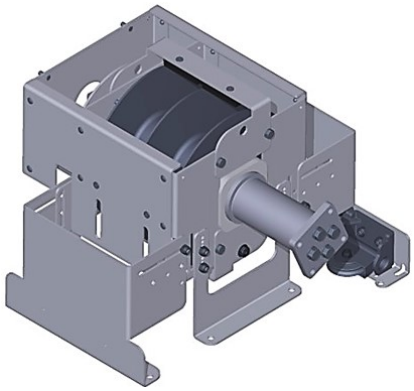

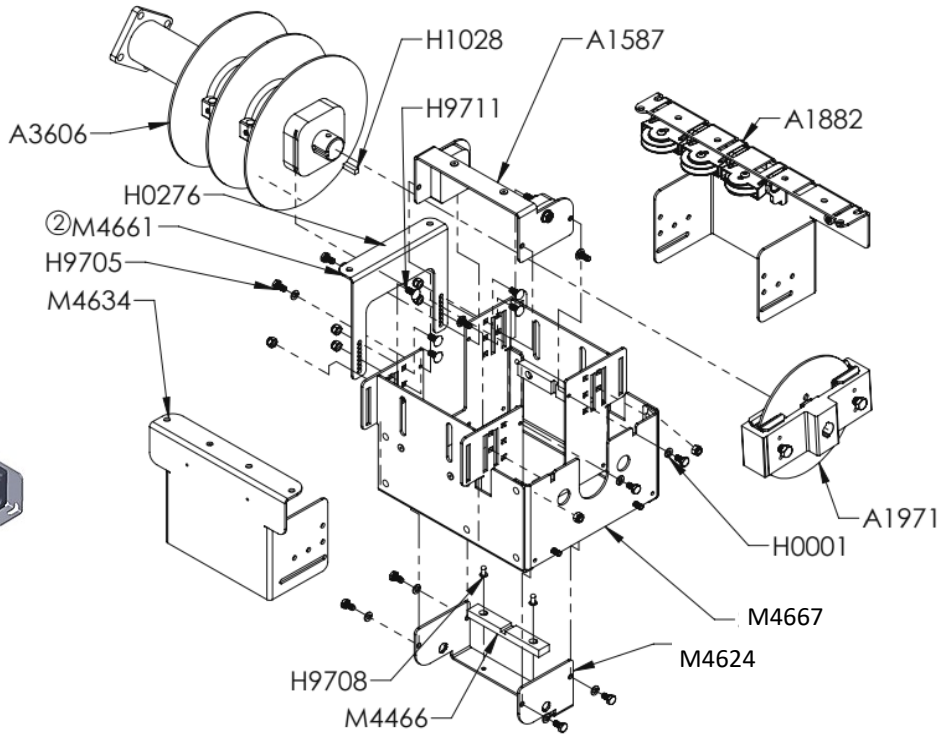

A3690	Eclipse Mechanism with Non-split Cone Deck LEFT 214
A3691	Eclipse Mechanism with Non-split Cone Deck RIGHT 214

© Latham Pool Products, Inc. 2022 All rights reserved.

Eclipse NME Recessed Assembly

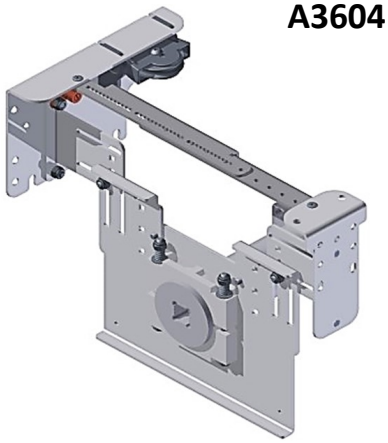

A3604

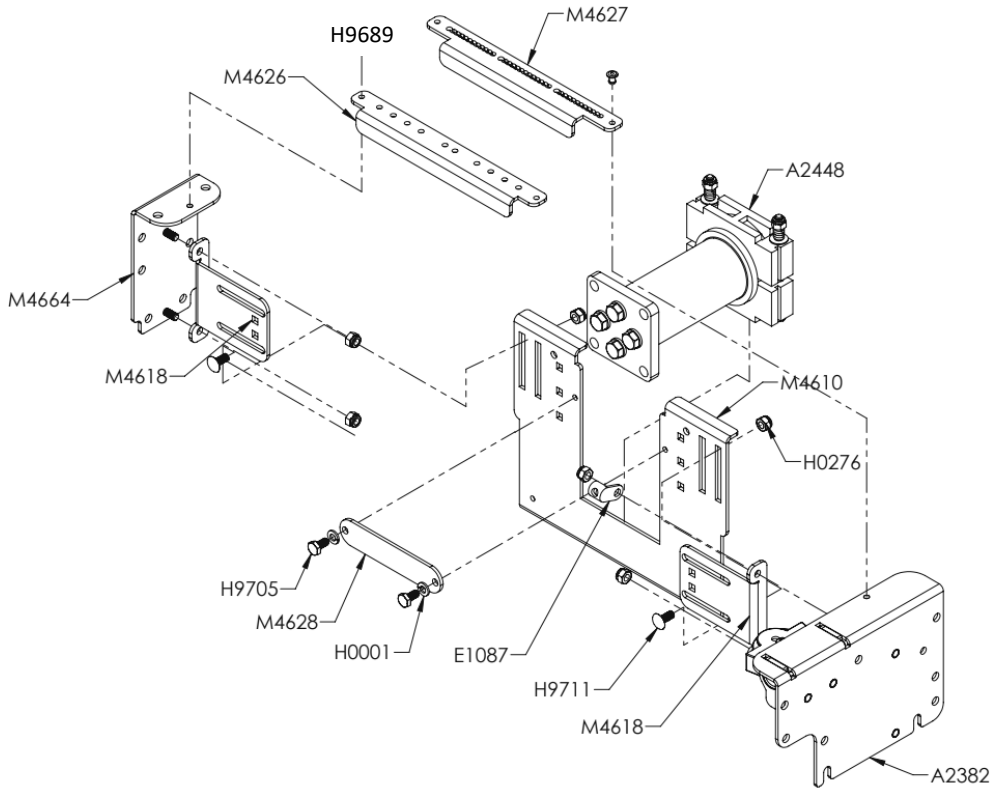

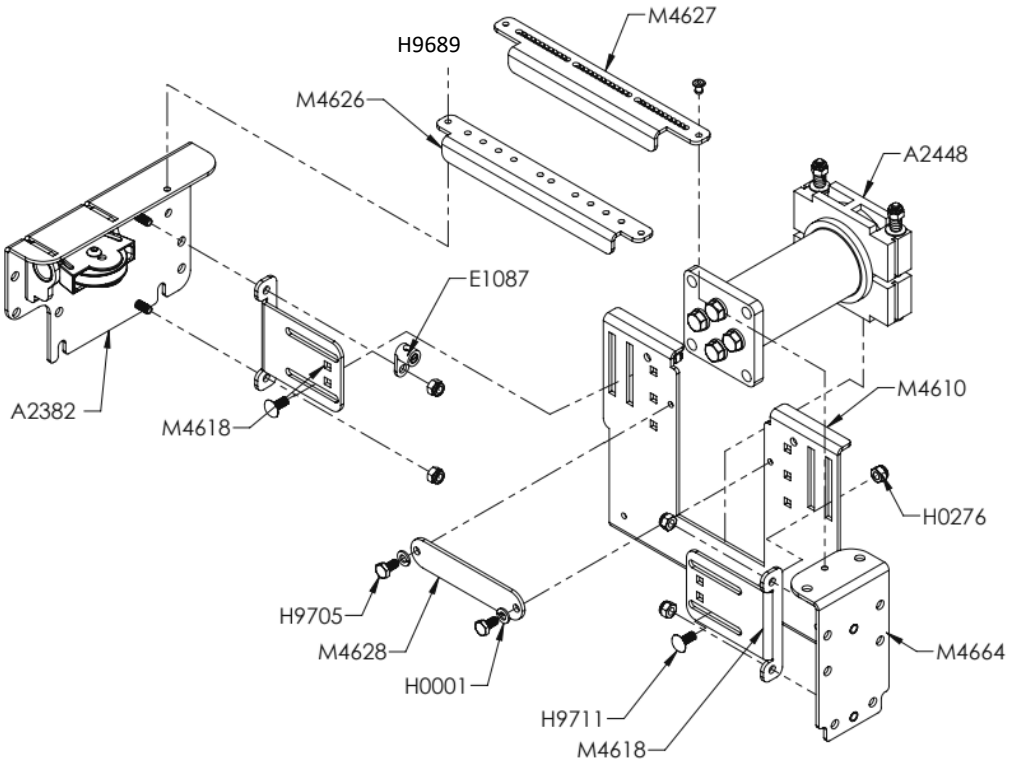

A3601

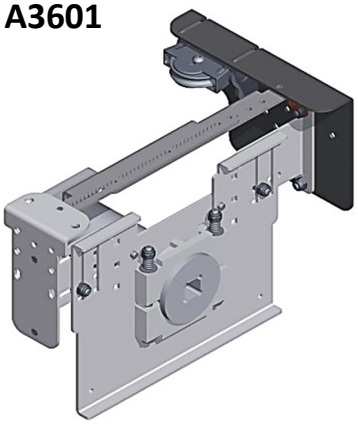

A3604	Eclipse NME Assembly Non-split Recessed LEFT 214
A3601	Eclipse NME Assembly Non-split Recessed RIGHT 214

© Latham Pool Products, Inc. 2022 All rights reserved.

Eclipse NME Deck Assembly

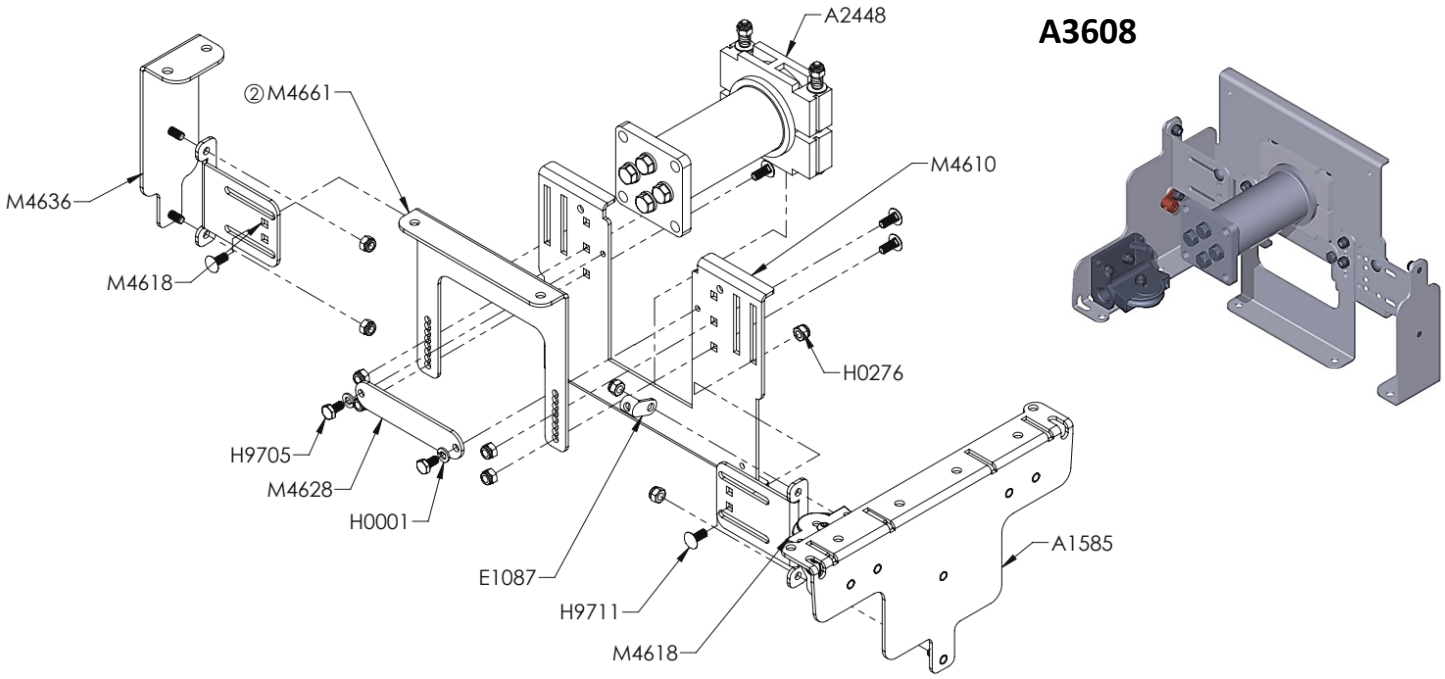

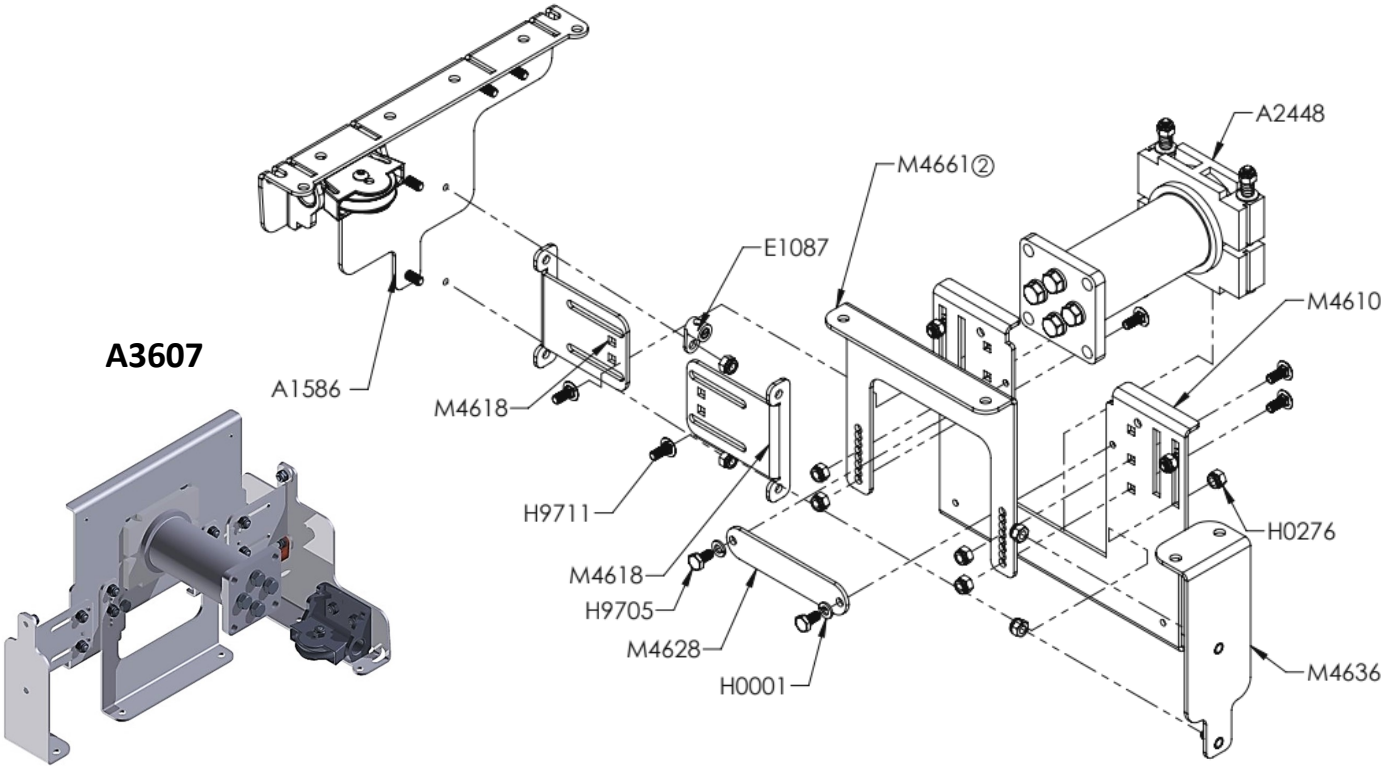

A3608	Eclipse 403 Deck RIGHT NME w/ Non-split Cone 214
A3607	Eclipse 403 Deck LEFT NME w/ Non-split Cone 214

© Latham Pool Products, Inc. 2022 All rights reserved.

Eclipse ME Pulley Bracket Assemblies

A1583

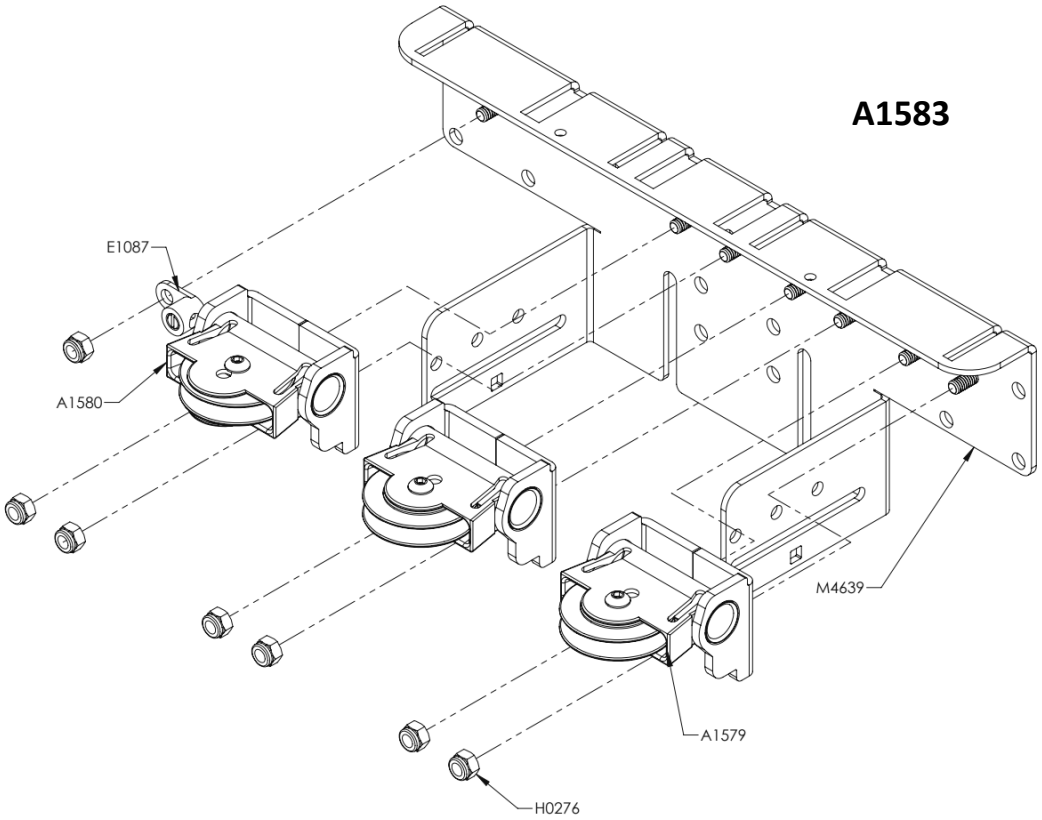

A1882

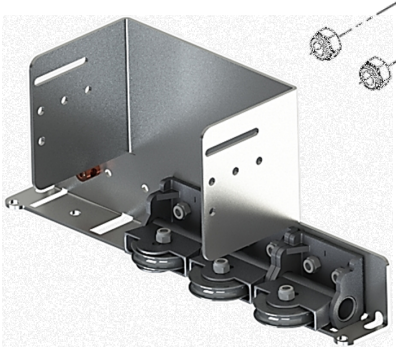

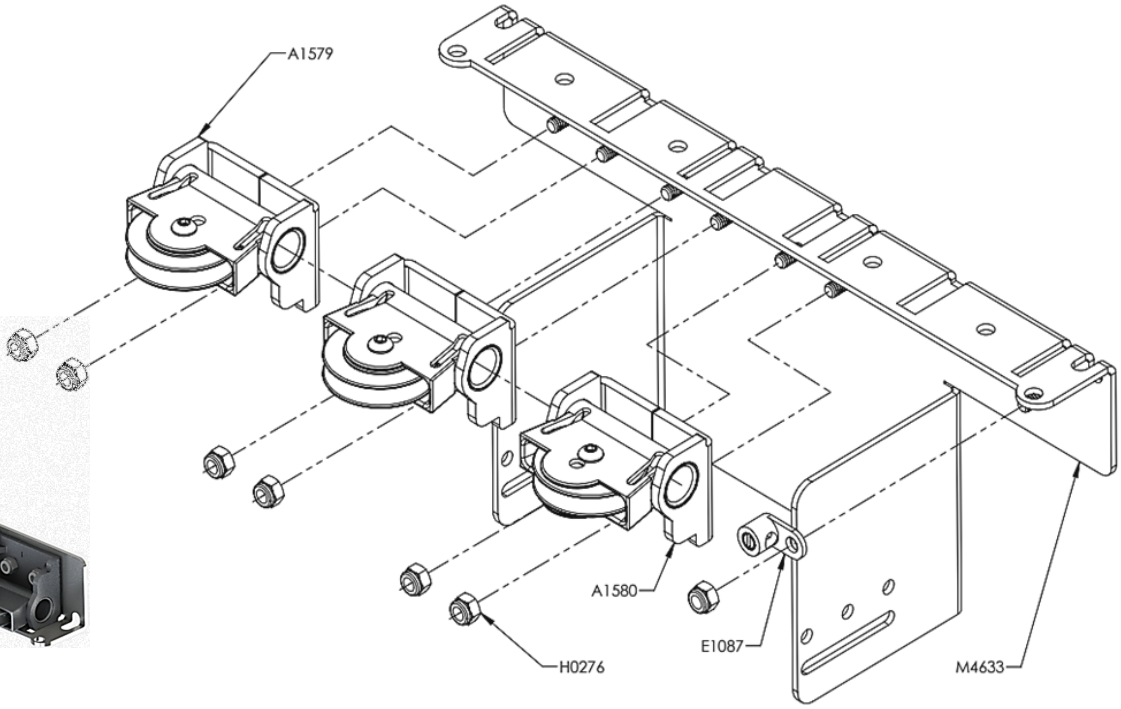

A1583	Eclipse 3 Pulley Bracket Assembly UT RIGHT
A1584	Eclipse 3 Pulley Bracket Assembly UT LEFT
A1882	Eclipse 3 Pulley Bracket Assembly Deck RIGHT
A1883	Eclipse 3 Pulley Bracket Assembly Deck LEFT

© Latham Pool Products, Inc. 2022 All rights reserved.

Eclipse NME Pulley Bracket Assembly

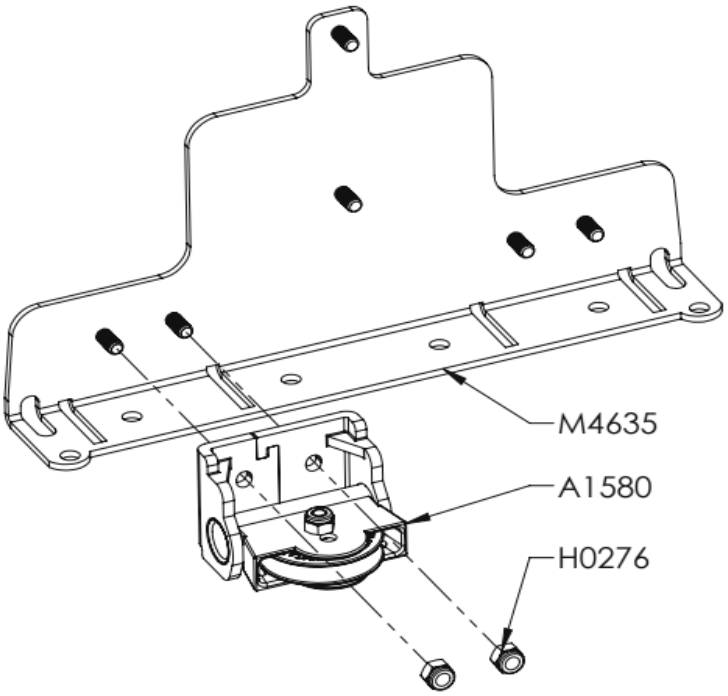

A1585

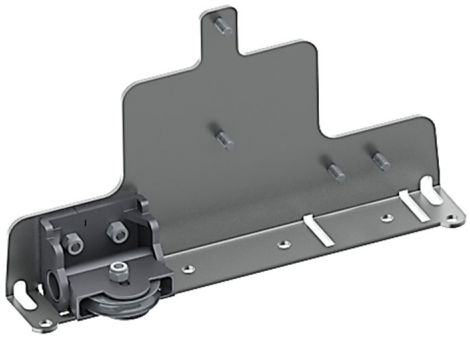

A2382

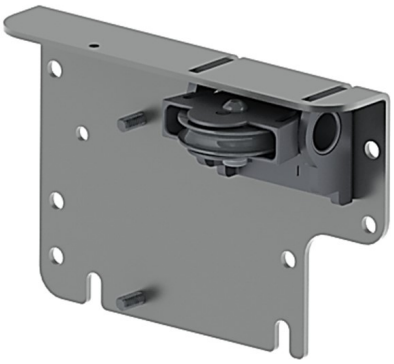

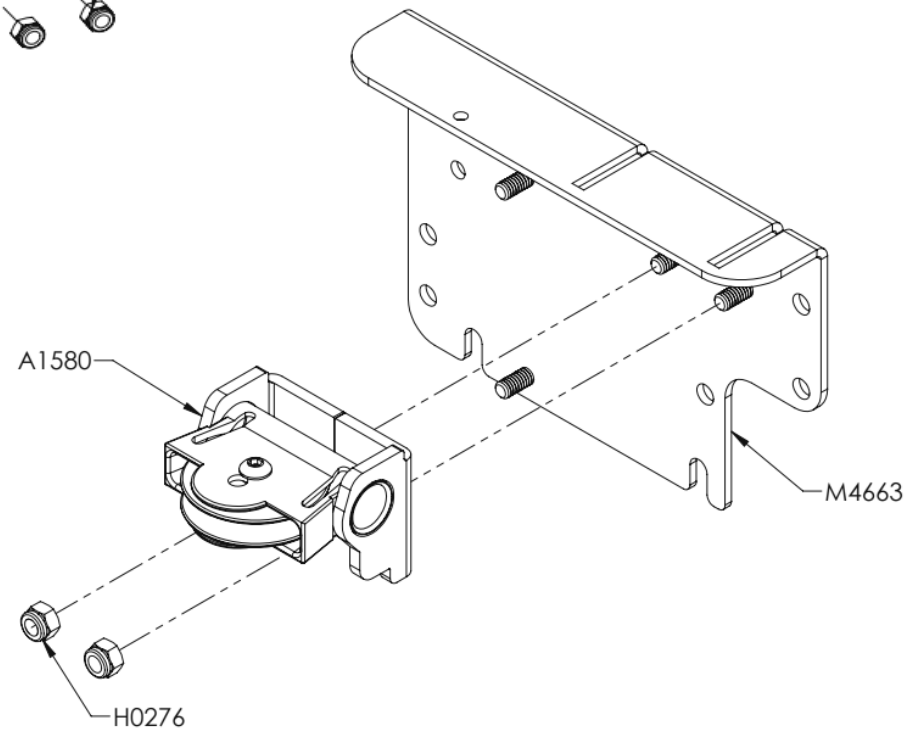

A1585	Bracket Assembly 1 Pulley NME Eclipse Deck RIGHT
A1586	Bracket Assembly 1 Pulley NME Eclipse Deck LEFT
A2381	Bracket Assembly 1 Pulley NME Eclipse UT RIGHT
A2382	Bracket Assembly 1 Pulley NME Eclipse UT LEFT

© Latham Pool Products, Inc. 2022 All rights reserved.

Eclipse Rope Reel Assembly

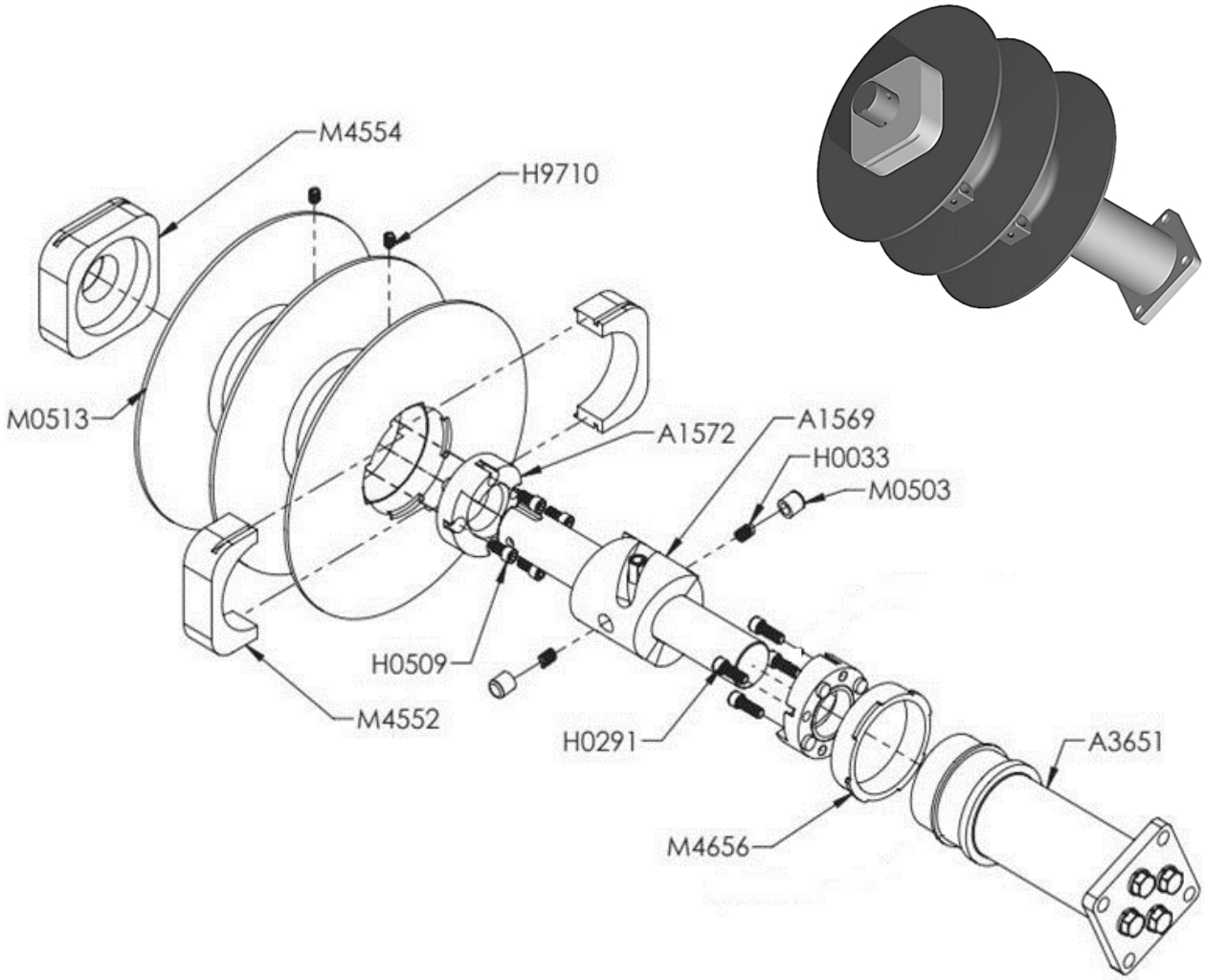

A3605	Eclipse Rope Reel Assembly w/ Gears & Non-split Cone RRT/DLT
A3606	Eclipse Rope Reel Assembly w/ Gears & Non-split Cone RLT/DRT

© Latham Pool Products, Inc. 2022 All rights reserved.

Eclipse Rope Reel Brake Assembly

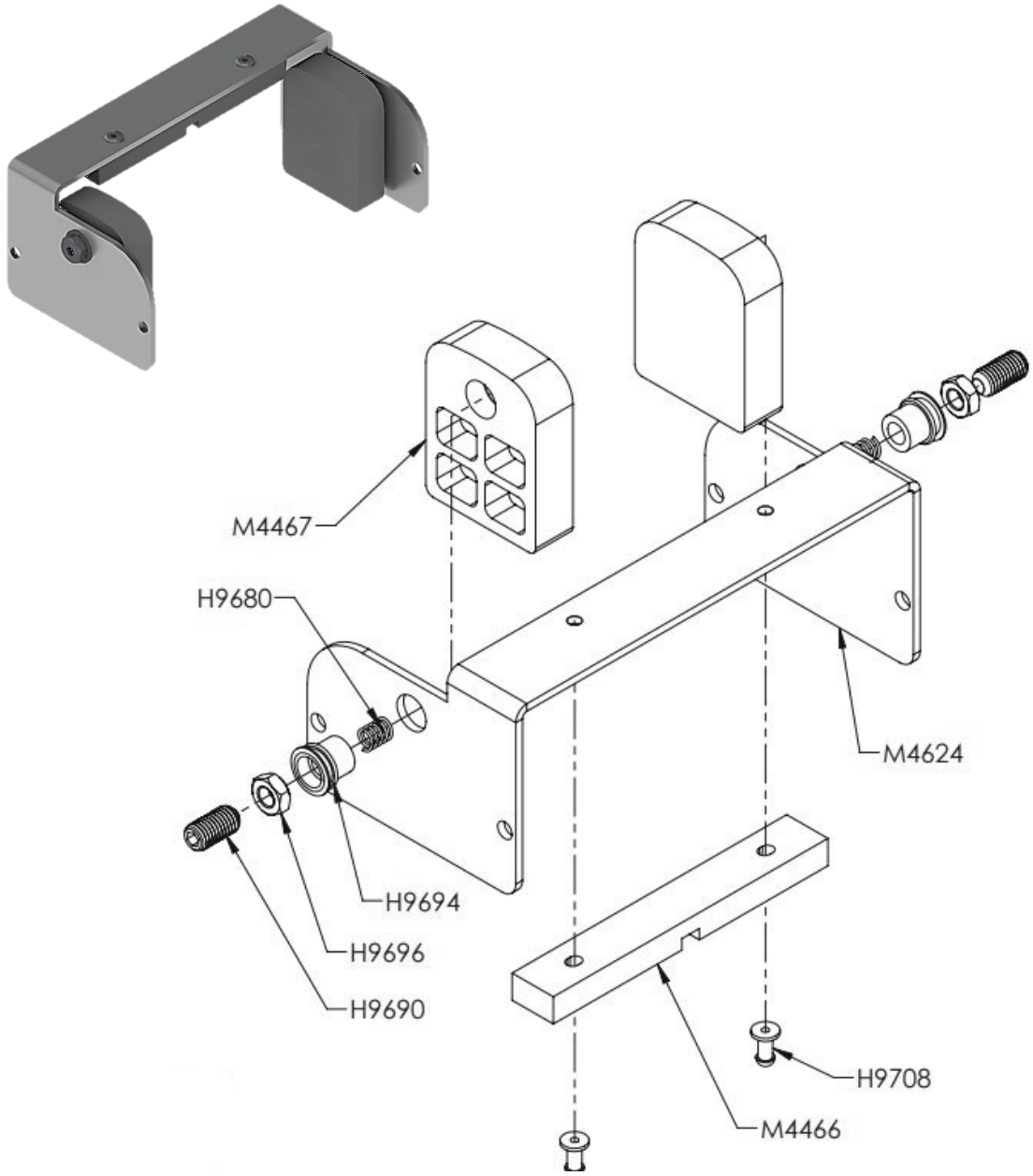

A1587	Rope Reel Brake Assembly

© Latham Pool Products, Inc. 2022 All rights reserved.

Eclipse Caliper Torque Limiter

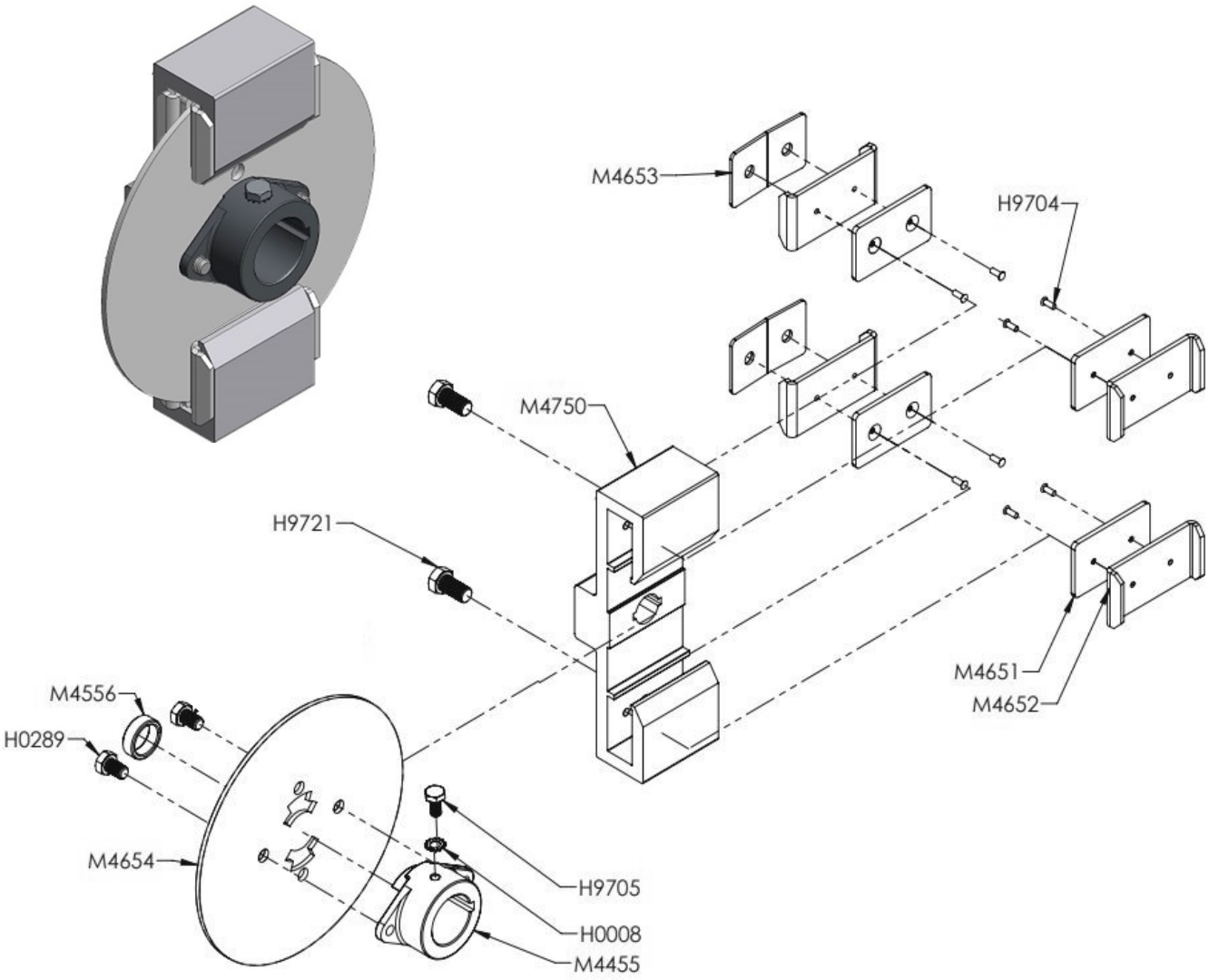

A1971	Torque Limiter Assembly Model C Eclipse 2012

© Latham Pool Products, Inc. 2022 All rights reserved.

Eclipse NME Cone & Brake Assembly

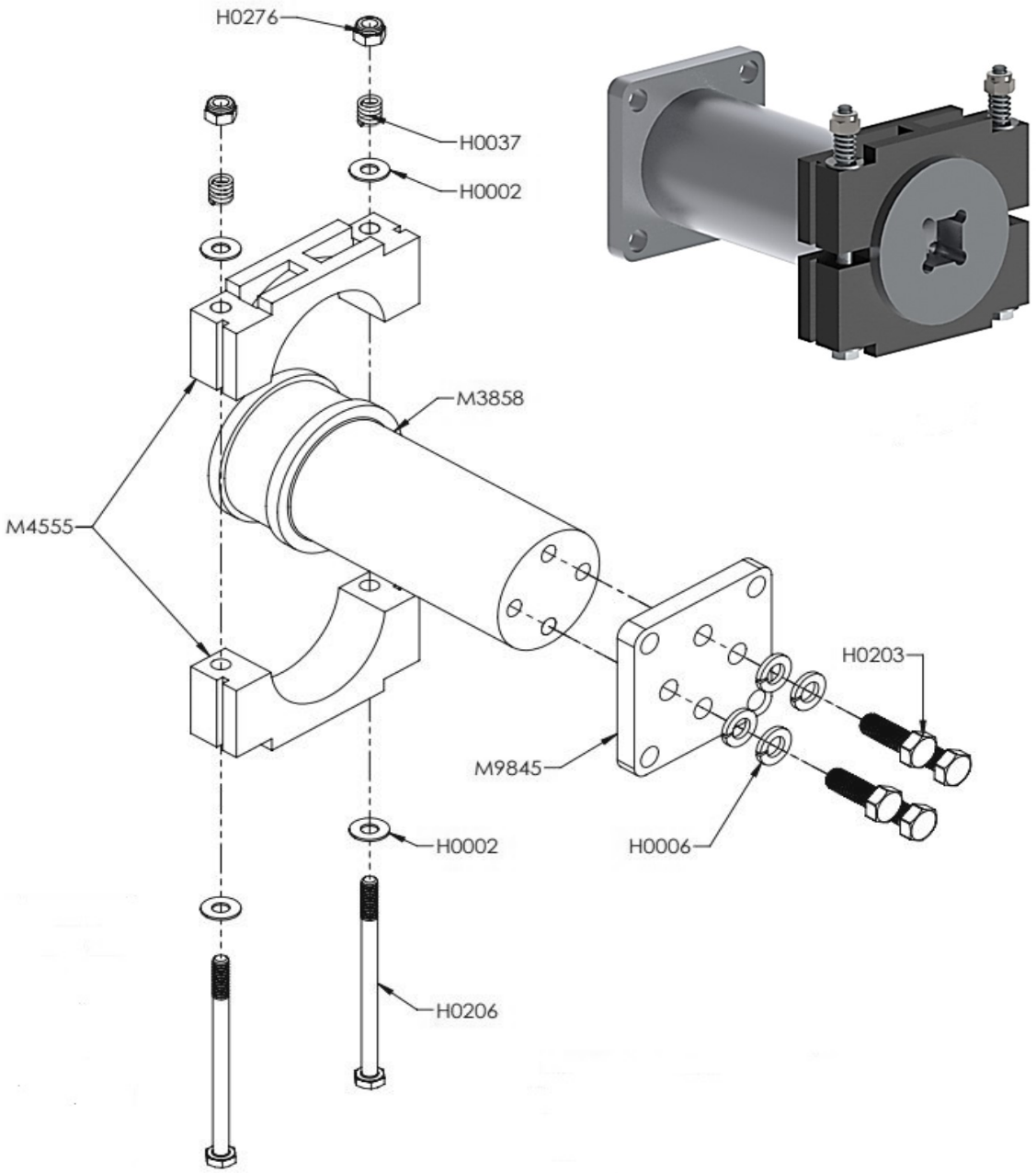

A2448	Eclipse NME Cone and Brake Assembly
A1517	Eclipse NME Brake Assembly (no cone)

© Latham Pool Products, Inc. 2022 All rights reserved.

Lid and Bench Brackets

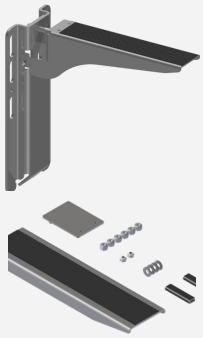	A1932 A0507 A1421 A1398 A3326 A2393 A2364 A2376 A2365 A2392	Lid Bracket adj. arm 13” Walk-on & Base SS Lid Bracket adj. arm 12” Walk-on STONE Lid 7.5” Base Aluminum Lid Bracket adj. Assembly 13” Walk-on with 7-1/2” Base Aluminum Lid Bracket adj. Assembly to Use with Flush Lid Kit for 14” Lid Aluminum Lid Bracket Width Extension Kit SS 418 Lid Bracket Ext Kit 15 - 17” SS 11.75” Long Lid Bracket Ext Kit 17 - 19” SS 13.75” Long Lid Bracket Ext Kit 19 - 21” SS 15.75” Long Lid Bracket Ext Kit 21 - 23” SS 17.75” Long Lid Bracket Ext Kit 23 - 25” SS 19.75” Long
	A0151	Lid Bracket Walk-on HD SS 3/8” Specify Size (custom order)
	M4105	Standard Under Track Lid Bracket
	M4106	Standard Top Track Lid Bracket
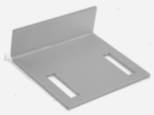	M3970	Lid Bracket Walk-on End 5” Aluminum
	M3806	Lid Bracket Walk-on End 10” Aluminum
	55041 22662	Drop-in Lid Mount 10 ft Extended Drop-in Lid Mount, 5/16” Slots
	A2409 A2415	Lid Bracket w/ Bolt for 309 Riser Panel (X0944) SS for 14” Box Lid Bracket w/ Bolt for 309 Riser Panel (X0944) SS for 12-5/8” Box
	A3409	Lid Bracket w/ Bolt for 419 Zero Reveal Flush Lid Riser
	A0231 A0008 A0154 A0002	Bench Bracket Center 14” High 21” Wide (1 week ship) Bench Bracket Center 15” High 19” Wide (1 week ship) Bench Bracket Center 15” High 21” Wide (1 week ship) Bench Bracket Custom Size (1 week ship)

© Latham Pool Products, Inc. 2022 All rights reserved.

Classic Aluminum Lid for TT & UT Systems

X0004 X0817	Lid Aluminum 11” STD Per ft Lid Aluminum STD 20’ 4” Piece
X0121 X0659	Lid Aluminum Motor End Per ft Lid Non-motor End Aluminum Per ft
X0943 X0951	Lid Hinge 8” Aluminum 24 ft Lid Hinge 8” Aluminum Per ft
A0376	Lid Wedge Set of 2
A0025 A0026	Lid Kit Aluminum, 8” Hinge for 20’ Track Space UT Lid Kit Aluminum, 8” Hinge for 20’ Track Space TT
A1784	Lid Hinge Attachment Hardware Kit
A0375	Lid Endcap Set of 2

Note: Some parts may be discontinued or limited stock

© Latham Pool Products, Inc. 2022 All rights reserved.

Flush Lid for TT & UT Systems

A2420 A2421 A2422	Lid Kit Only for 14” Box Flush Lid 309 Complete with Riser 24’ (no box or C-Cap - order part A1752 if no profile) Lid Kit Only for 12-5/8” Box Flush Lid 309 Complete with Riser 24’ (no box or C-Cap - order part A1752) Lid Kit Only for 15-1/2” Box Flush Lid 309 Complete with Riser 24’ (no box or C-Cap)
A2418 A2417 A2419	Flush Lid 309 Extension Kit for 14” Lid Per ft (lid brackets not included) Flush Lid 309 Extension Kit for 12-5/8” Lid Per ft (lid brackets not included) Flush Lid 309 Extension Kit for 15-1/2” Lid Per ft (lid brackets not included)
X0008 X0009	6” Flush Lid Panel Snap 7-1/2” Flush Lid Panel Snap
A2410 A2412 A2413 X0944	Riser Box End Assembly 309 for 14” Box Riser Box End Assembly 309 for 12-5/8” Box Riser Box End Assembly 309 for 15-1/2” Box Flush Lid Riser 309 - 24’ GRAY
M9354	Riser Panel 309 Cut to fit Coping Transition Profiles 40” Long Notch on Both Ends
A2414	Flush Lid 309 Hardware Kit
A2489	Quick Attach Mechanism Mounting Kit 2013
A2896 A2895	Lock Assembly for Flush Lid Kit (Includes 2 locks) Lid Lock Kit for Zero Reveal Flush Lid

© Latham Pool Products, Inc. 2022 All rights reserved.

Flat Lid for TT and UT Systems

A2432 A2433 A2434 A2431	Lid Kit Flat 309 for TT 14” Box 24’ Long (includes lid brackets) Lid Kit Flat 309 for UT 14” Box 24’ Long (no brackets) Lid Kit Flat 309 for UT 14” Box 24’ Long w/ steel lid brackets Lid Kit Flat 309 for UT or TT 14” Box 4’ Extension Kit
X0939	Flat Lid 309 Hinge 24 ft
X0940	Flat Lid 309 Lid Panel to Hinge Attachment 24 ft
A3426	Flat Lid Endcap - for Snap Panels SET
A3425	Flat Lid Wedge - for Snap Panels SET
A2427 A2428 A2429	Flat Lid 309 End Support Assembly LEFT for 14” Box Flat Lid 309 End Support Assembly RIGHT for 14” Box Flat Lid 309 End Support Assembly for 14” Box SET
M9363	Flat Lid 309 Cut Cover for 14” Box
M9362	Splice for Flat Hinged Lid 309
X0053	Metal Box C-Cap

© Latham Pool Products, Inc. 2022 All rights reserved.

Wheel Assembly TT for 2-1/2” LE

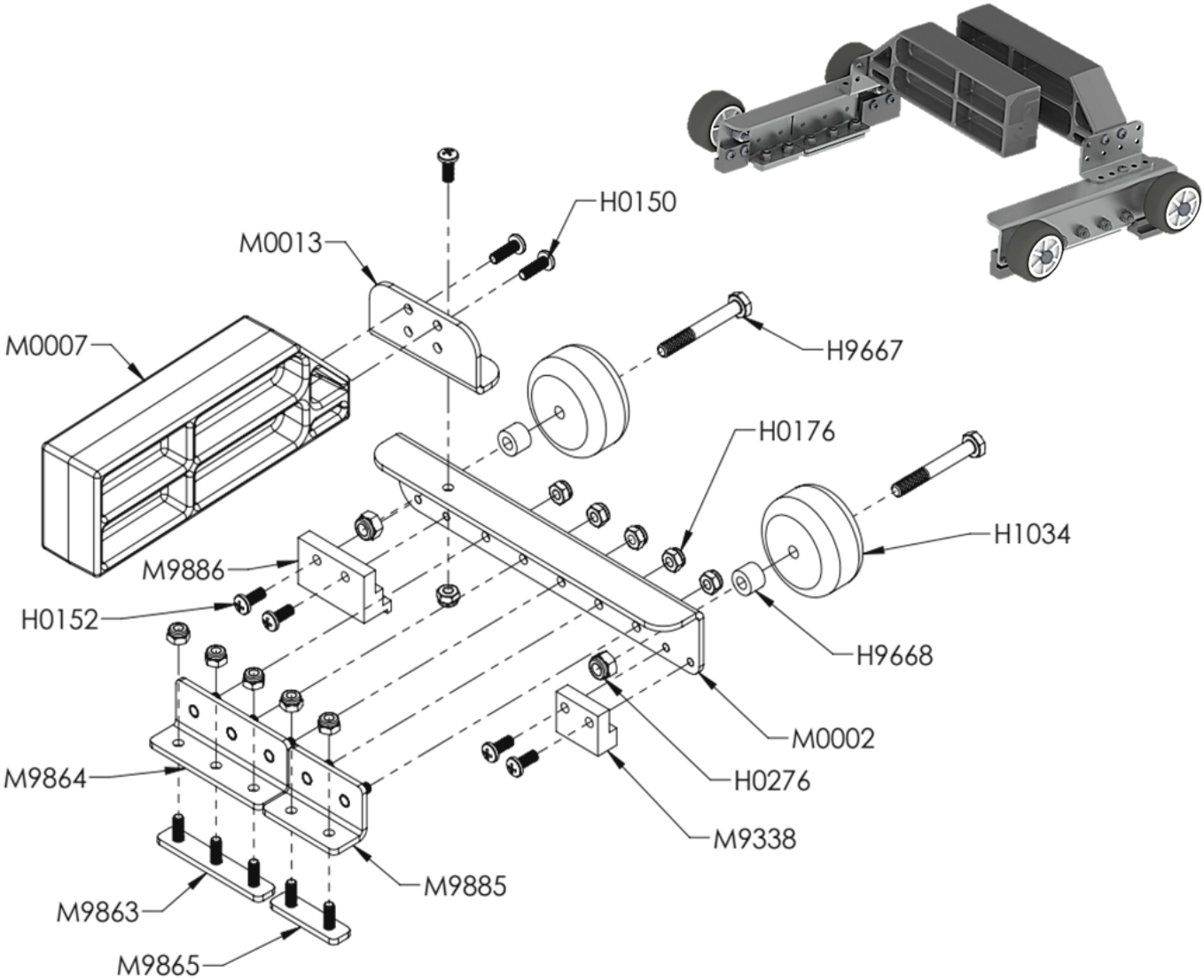

A1546	Wheel Assembly for 2-1/2” LE Standard TT SET
A1536	Wheel Assembly for 2-1/2” LE Standard TT RIGHT
A1538	Wheel Assembly for 2-1/2” LE Standard TT LEFT
A1568	Wheel Assembly for 2-1/2” LE RHT / RVT SET
A1567	Wheel Assembly for 2-1/2” LE RHT / RVT RIGHT
A1566	Wheel Assembly for 2-1/2” LE RHT / RVT LEFT

© Latham Pool Products, Inc. 2022 All rights reserved.

Wheel Assembly TT for 1” LE

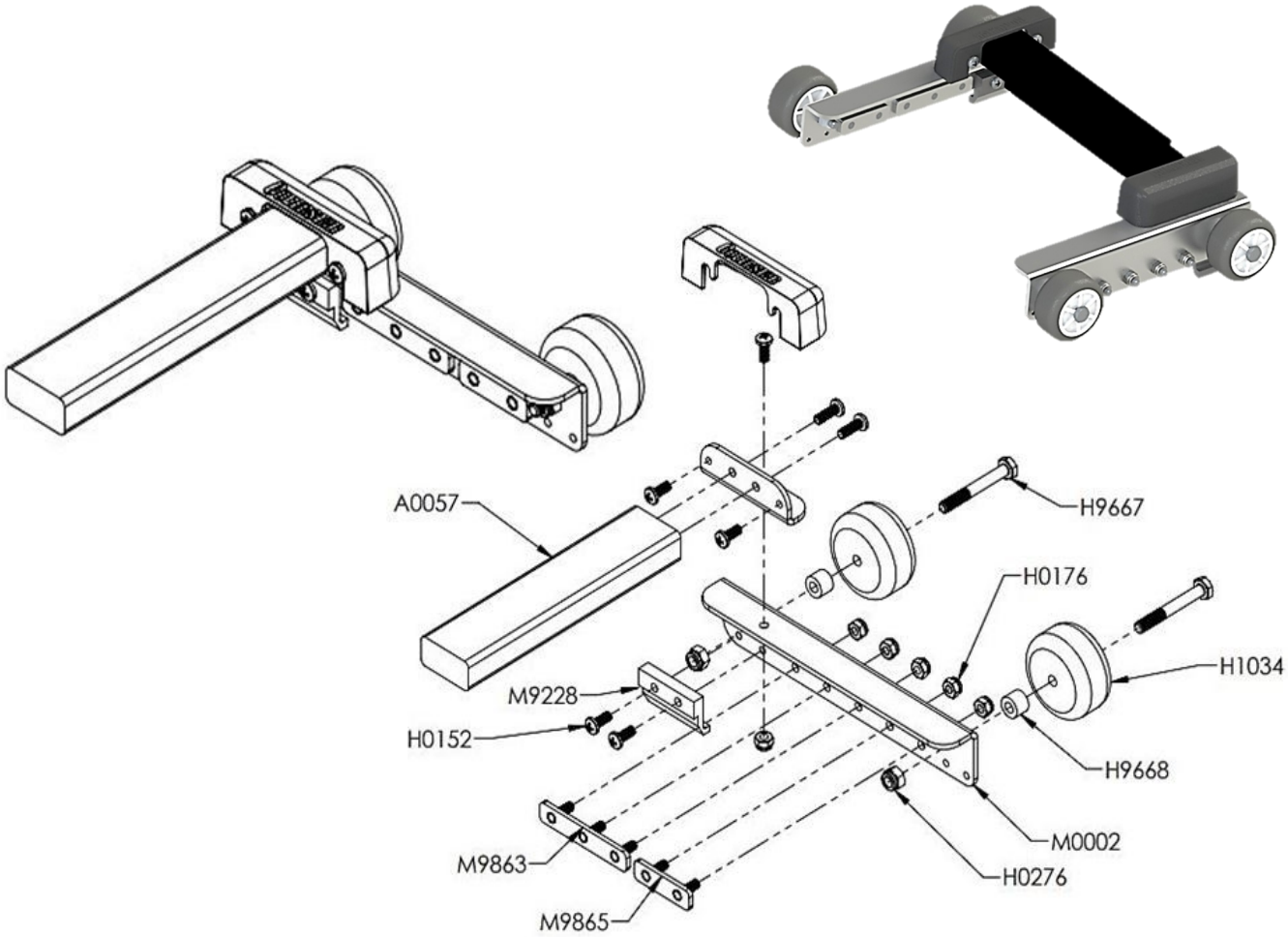

A1575	Wheel Assembly for 1” LE RHT / RVT SET
A1570	Wheel Assembly for 1” LE RHT / RVT RIGHT
A1571	Wheel Assembly for 1” LE RHT / RVT LEFT
A1552	Wheel Assembly for 1” LE Standard TT SET
A1544	Wheel Assembly for 1” LE Standard TT RIGHT
A1545	Wheel Assembly for 1” LE Standard TT LEFT

© Latham Pool Products, Inc. 2022 All rights reserved.

Wheel Assembly TT for 3” LE

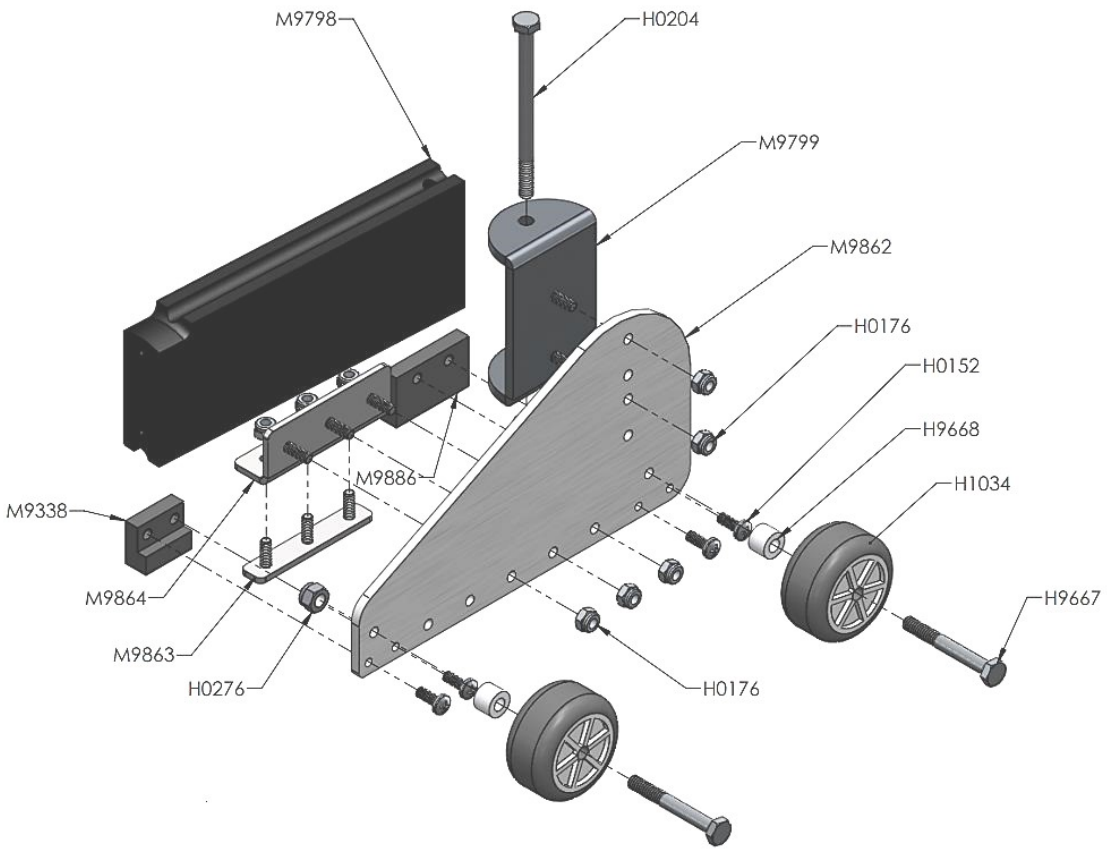

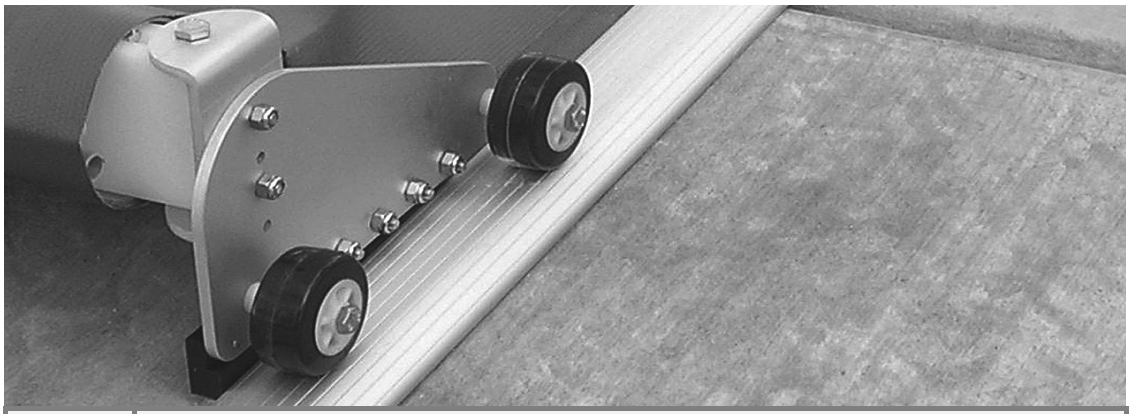

A1565 A1562 A1563	Wheel Assembly 805 TT w/ LE Inserts 3” Tube SET Wheel Assembly 805 TT w/ LE Inserts 3” Tube LEFT Wheel Assembly 805 TT w/ LE Inserts 3” Tube RIGHT
A2198 A2194 A2195	Wheel Assembly 805 w/ LE Inserts 3” Tube Gray SET Wheel Assembly 805 RHT 305, RVT w/ LE Inserts 3” Tube Gray LEFT Wheel Assembly 805 RHT 305, RVT w/ LE Inserts 3” Tube Gray RIGHT

© Latham Pool Products, Inc. 2022 All rights reserved.

Roll-up Tubes & Leading Edges

	X0021 X0080	Tube 3” LE Dual Purpose Non-anodized 20’ Standard Tube 3” LE Dual Purpose Anodized 24’ (Special order)
	X0718	Tube 2” x 16’-6”
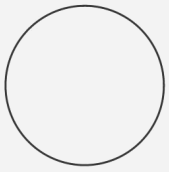	X0676 X0015 X0001 X0677	Tube 4” Aluminum 40 ft Tube 4” Aluminum Per ft Tube 6” Aluminum STD Per ft Tube 6” Aluminum STD 40 ft
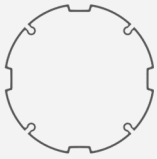	X0672 X0673 A3710 A0796	Tube 6” Extruded Clear Anodized 28 ft Tube 6” Extruded Clear Anodized 20 ft Tube 6” Extruded Splice Kit 72 in Tube Insert for Extruded 6” Tube w/ Screws
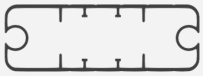	X0717	Leading Edge Bar 1” Flat 16 ft
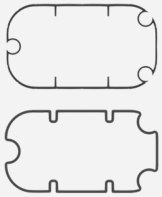	X0007 X0024 X0451	Tube 2-1/2” Leading Edge Anodized 20 ft Tube 2-1/2” Leading Edge Anodized 24 ft Rectangle LE Splice 2-1/2” 2018
	M3315 M3316	LE Support Raises 2-1/2” LE 1 inch LE Support Raises 2-1/2” LE 2 inches

© Latham Pool Products, Inc. 2022 All rights reserved.

Roll-up Tube & Leading Edge Inserts

	A0436 M0311	Tube Insert w/ Screws for 4” Tube EA Tube Insert for 4” Tube (no screws) EA
	M3875 A0798 A0352	Tube Insert 10” (insert for drive tube) EA Tube Insert w/ Screws for 10” Tube EA Tube Insert w/ Screws for 8” Tube EA
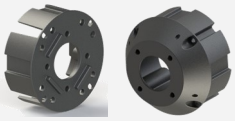	A0797 A1796	Tube Insert Composite w/ Screws for 6” Tube EA Tapered Tube Insert for 6” Tube Repair Kit EA
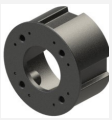	A1405	Tube Insert w/ screws - 4.7” Extruded Composite EA
	A0093 A1001 A0800	Leading Edge Adapter 4” (3” tube w/ white donuts) Leading Edge Adapter 5” (3” tube w/ white donuts) Leading Edge Adapter 6” (3” tube w/ white donuts)
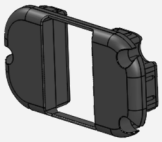	M0008	Leading Edge Endcap 2-1/2” EA
	M0007	Rectangular Leading Edge Insert 2-1/2” EA
	A1678	LE Insert & Caps for 2-1/2” LE SET
	A1688 A1870	Leading Edge Insert Assembly UT for 3” LE SET Leading Edge Insert Assembly UT for 2” LE SET
	A0057	Leading Edge Insert Assembly for 1” LE EA

© Latham Pool Products, Inc. 2022 All rights reserved.

Polymer Housing

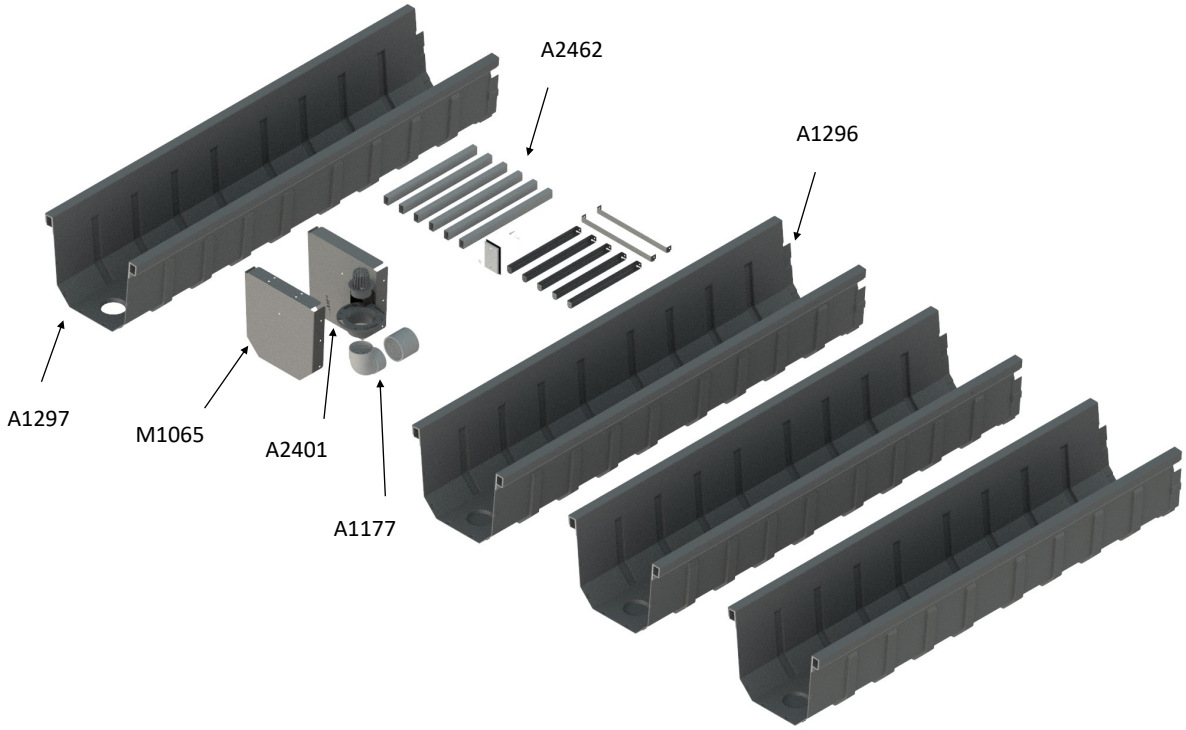

A2400 A2462	Polymer Housing Assembly 24’ (order mounting kit separately) Polymer Housing Hardware Kit 24’ (order mounting kit separately)
A2402 A2407	Polymer Housing Assembly 18’ (order mounting kit separately) Polymer Housing Hardware Kit 18’ (order mounting kit separately)
A2408	Polymer Housing 6’ Extension w/ Splice
A2404	Polymer Housing 311 Mounting Kit UT (for VL pools)
A2405	Polymer Housing 311 Mounting Kit UT (for gunite pools)
A2403	Polymer Housing 311 Mounting Kit RT (for gunite or VL pools)
A2849 A2850	Polymer Housing 311 Mounting Kit UT (for fiberglass pools) Polymer Housing 311 Mounting Kit UT (for fiberglass pools) w/ Standoff Brackets
A3430 A3551	Housing Turnbuckle Backfill Brace Housing Turnbuckle Brace Set of 5

Note: Some parts may be discontinued or limited stock

© Latham Pool Products, Inc. 2022 All rights reserved.

Deck Mount Plastic Housings

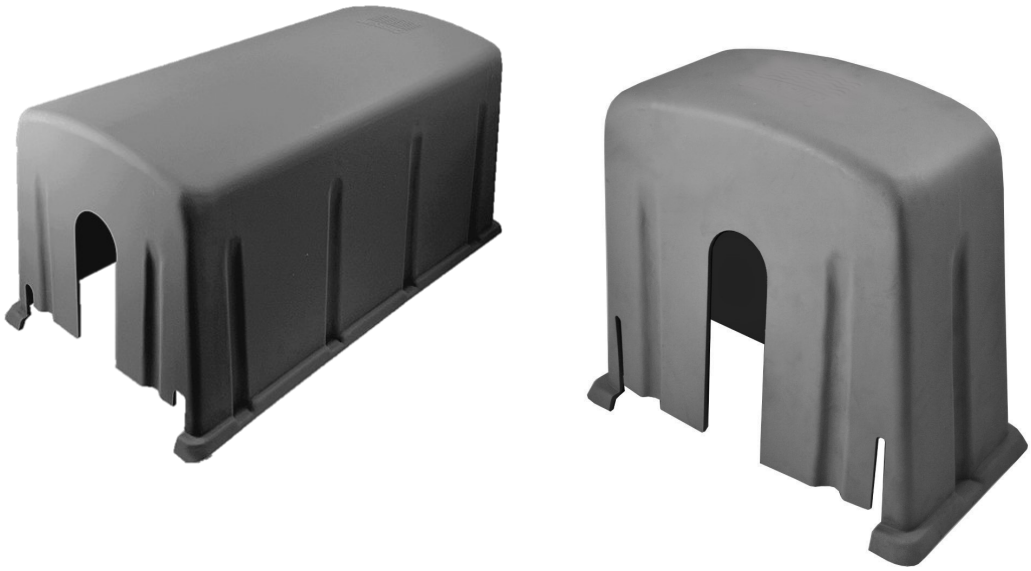

A0240	Housings Plastic GRAY LEFT/ RIGHT SET
H9590	Deck Mount Motor End Cover GRAY
H9650	Deck Mount Non-motor End Cover GRAY

© Latham Pool Products, Inc. 2022 All rights reserved.

Aluminum Bench

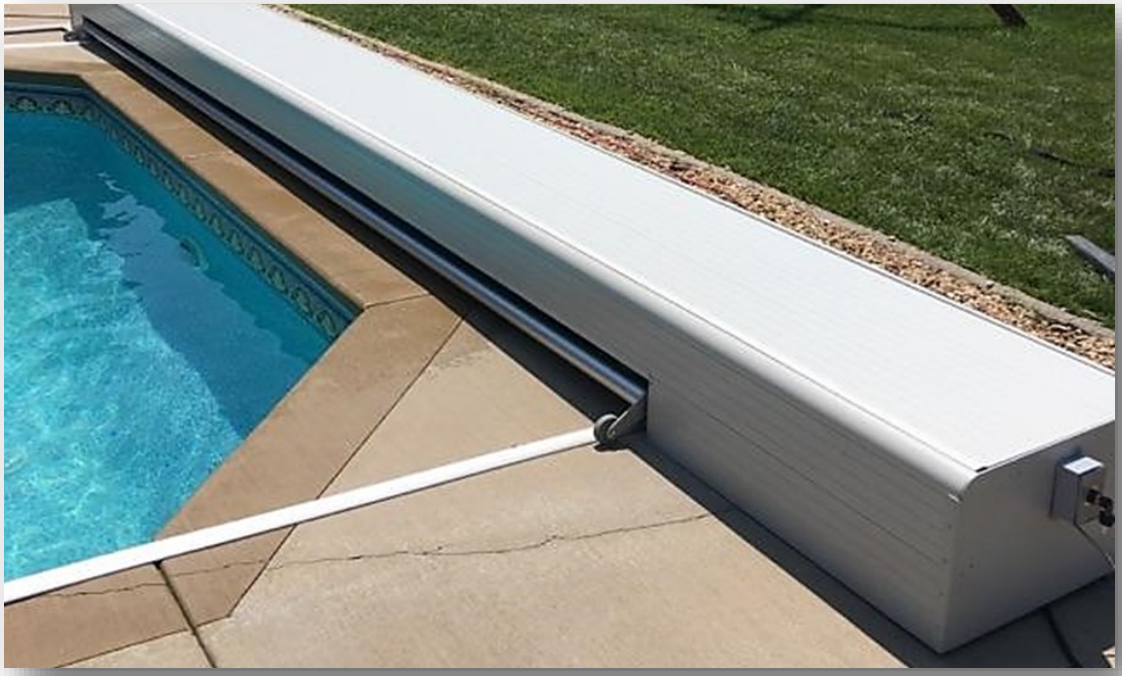

A3358	Aluminum Bench 23” Wide 24’ Long
A3385	4 ft. Bench Extension Kit for A3358
A3380	Aluminum Bench 23” Hardware Kit
M1051	Aluminum Bench 23” Bracket
M1053	Aluminum Bench Attachment Bracket

© Latham Pool Products, Inc. 2022 All rights reserved.

Rope and Semi-rigid Tab

C5080	PowerFlex® Rope 80 Semi-rigid Tab 518
C5090	PowerFlex® Rope 90 Semi-rigid Tab 518
C5100	PowerFlex® Rope 100 Semi-rigid Tab 518
C5110	PowerFlex® Rope 110 Semi-rigid Tab 518
C5120	PowerFlex® Rope 120 Semi-rigid Tab 518
C5125	PowerFlex® Rope 125 Semi-rigid Tab 518
C5130	PowerFlex® Rope 130 Semi-rigid Tab 518
C5140	PowerFlex® Rope 140 Semi-rigid Tab 518
C5150	PowerFlex® Rope 150 Semi-rigid Tab 518
C5200	PowerFlex® Rope Custom Per Foot Semi-rigid Tab 518
C1267	Rope 2013 PowerFlex® White Silver Tracer Per Foot
C4062	Tab, Semi-rigid for Detachable Rope 418

C3280	PowerFlex® Detachable Rope Assembly 80 Ft
C3290	PowerFlex® Detachable Rope Assembly 90 Ft
C3200	PowerFlex® Detachable Rope Assembly 100 Ft
C3210	PowerFlex® Detachable Rope Assembly 110 Ft
C3220	PowerFlex® Detachable Rope Assembly 120 Ft
C3225	PowerFlex® Detachable Rope Assembly 125 Ft
C3230	PowerFlex® Detachable Rope Assembly 130 Ft
C3240	PowerFlex® Detachable Rope Assembly 140 Ft
C3250	PowerFlex® Detachable Rope Assembly 150 Ft
C3300	PowerFlex® Rope Custom Per Foot
C1062	Detachable Rope 3" Tab Only Ready to Install on Rope

© Latham Pool Products, Inc. 2022 All rights reserved.

Vanishing Edge System Eclipse

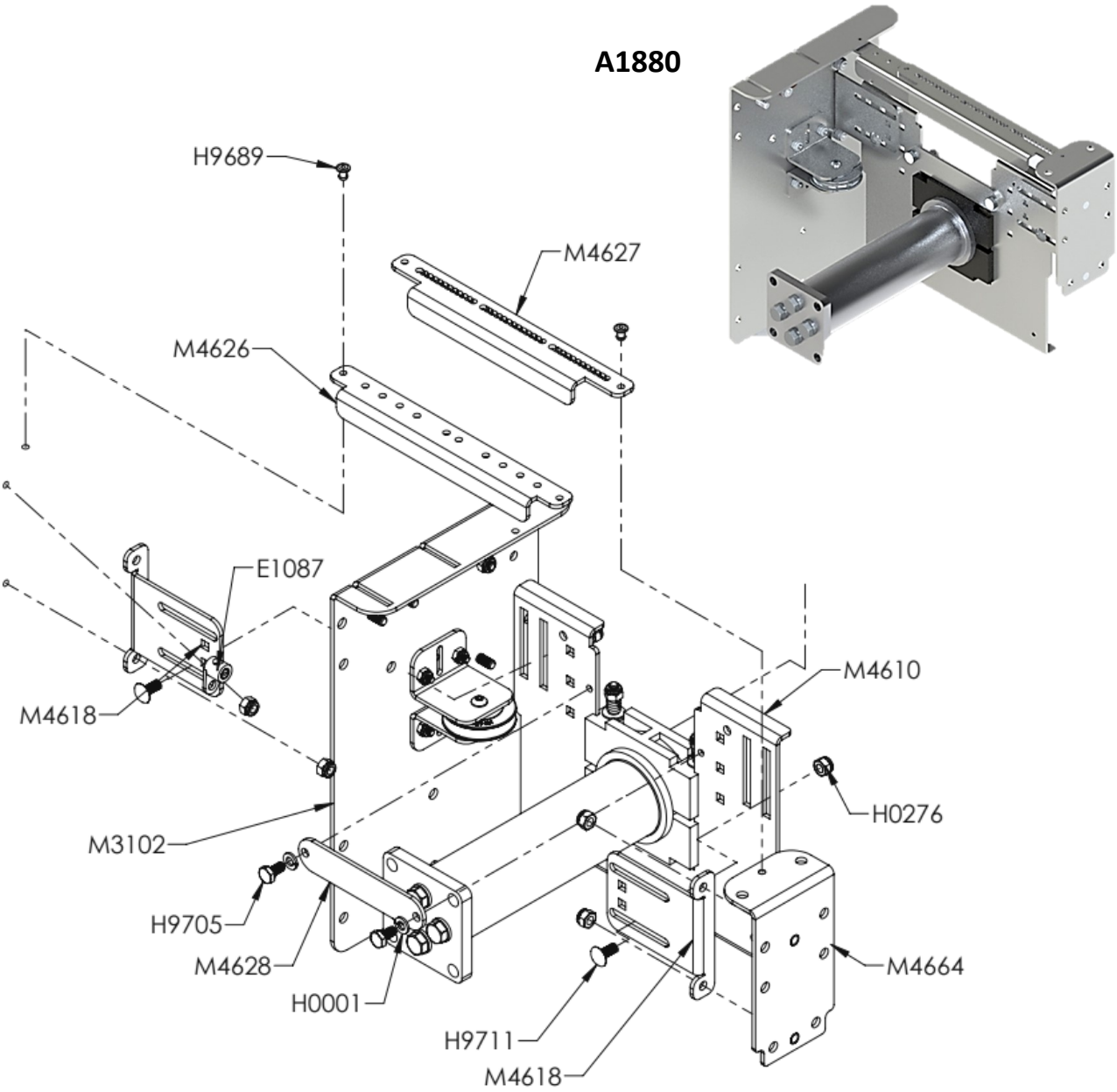

A1879 A1880	NME Assembly Eclipse VE UT Right/ Motor LEFT NME Assembly Eclipse VE UT Left/ Motor RIGHT
A3612 A3613	VE Kit UT Vertical Right/ Motor LEFT VE Kit UT Vertical Left/ Motor RIGHT

© Latham Pool Products, Inc. 2022 All rights reserved.

Vanishing Edge Assembly & Hardware

	A3833 A3834	VE Guide Feed w/Pulley Redirecting Bracket LEFT (Motor Right) VE Guide Feed w/Pulley Redirecting Bracket RIGHT (Motor Left)
	A3730 A3731	VE Kit - Redirects the Rope Under the Roll-up Tube, LEFT VE Kit - Redirects the Rope Under the Roll-up Tube, RIGHT
	A3451 A3452	Bottom VE Guide Feed RIGHT Bottom VE Guide Feed LEFT
	M3600	Teardrop Shaped VE Spacer
	M3100	NME Cone Eclipse VE 3” Offset
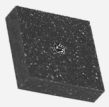	M3818	Spacer for VE Track 1-1/2” x 1-1/2” x 3/8”
	A2873 A2874	Slider Assembly UT Vertical VE LEFT Slider Assembly UT Vertical VE RIGHT
	M9501 M9502 M9503	VE LE Support for 2-1/2” LE 3-1/2” VE LE Support for 2-1/2” LE 4-1/2” VE LE Support for 2-1/2” LE 5-1/2”
	A0265 A1414 A1415	Diverter Pulley for VE, Mounts Behind Guide Feed L or R/ ME or NME Pulley Endcap TT for Vanishing Edge VE SS RIGHT Pulley Endcap TT for Vanishing Edge VE SS LEFT
	A1417	Pulley Endcap UT w/ Stop VE Side

© Latham Pool Products, Inc. 2022 All rights reserved.

Sliders

	A3660	Bar-Lock Slider Assembly
	A1100	Slider Assembly for Detachable Rope STD SET
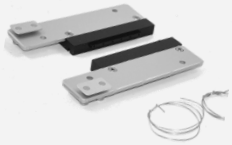	A0949 A0696	Slider Assembly UT 403/805 w/ Wire CS1800 STD SET Slider Assembly UT w/ Wire Pre-403 CS1800 SET
	A1153 A1152 A1151	Slider Assembly UT Retro for Detachable Rope Pre-403/805 Track White SET Slider Assembly UT LEFT Retro for Detachable Rope Pre-403/805 Track White Slider Assembly UT RIGHT Retro for Detachable Rope Pre-403/805 Track White
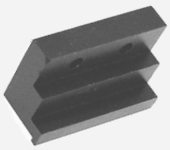	M9886	Slider Stop Block for Wheel Assembly 403/ 805 for STD TT Locks into Track
	M9338	Slider Stop Block for Wheel Assembly for STD TT 403 Using Detachable Rope
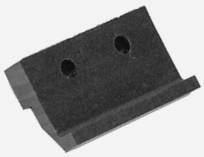	M9228	Slider Stop Block for Wheel Assembly 805 for RHT and RVT Locks into Track
	A1154	Slider TT Assembly w/ Wire Pre-403 Wire-on Retro Fits to Original Wheel Assembly
	M0365	Slider TT 1” x 1/2” x 3” Pre-403

© Latham Pool Products, Inc. 2022 All rights reserved.

Track & Hardware for Deck Mount TT Systems

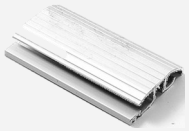	X0656 A1050	Track TT 403 for Detachable Rope 22’ STD Track Ext. Package 403 TT 1 Piece & 2 Splices, 13 Screws & Anchors
	X0675 A1051 A1893	Track TT 403 for Detachable Rope 22’ BRONZE Track Ext. Package 403 TT 1 Piece Bronze, 2 Splices, Screws & Anchors Track Package 403 TT BRONZE for Detachable Rope (4 guides, pulleys, guide feed, etc.)
	A1924	Splice Kit for Track TT 403
	A1795	Top Track Guide Hardware Kit 403 (screws, anchors, guide feed, splices, pulley endcap etc.)
	A0993	Guide Feed Assembly TT w/ Mounting Hardware Each
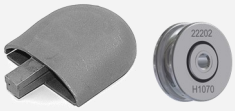	A2423 H1070	Pulley Endcap Top Track Assembly SS Pulley .250 Double Ball Bearing STD
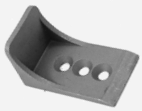	M9797	Stop TT 403 L Shaped SS
	A1798 A1705	Screw, 30 Pk PFSM 12 x 1-3/4” (H0334) Anchor Plastic 60 Pk STD #12 (H0340)
	A0952	Track Package 403 TT for Detachable Rope (4 guides, pulleys, guide feed, etc.)
	A1054 A1043 A1042	Track Conversion Package 403 TT 44’ 20 ft LE Track Conversion Package TT 24’ Anodized LE 2-1/2” Track Conversion Package TT 20’ Anodized LE 2-1/2”

© Latham Pool Products, Inc. 2022 All rights reserved.

Track & Hardware for Under Track Systems

	X0614 X0820 X0674 A1039 A1040 A1058	Track UT 403 for Detachable Rope 21’ STD (no mounting holes) Track UT 403 for Detachable Rope 21’ w/ Mounting Holes Track UT 403 for Detachable Rope 21’ BRONZE Track Conversion Package UT 20’ LE (2-1/2”) Track Conversion Package UT 24’ LE (2-1/2”) Anodized Track Conversion Package UT 403 TL 42’, 20’ LE
	X0765	Protector for Encapsulated Track, Covers Track Face During Construction 21 ft
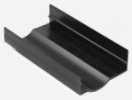	X0666	Protector for UT 403 & 801 Rigid PVC Covers Track During Construction 21 ft
	A1923	Splice Kit for Track UT 403
	A0407	Bracket Encapsulated UT w/ Screws, Anchors & Nuts SET
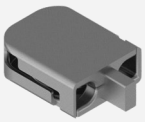	A0958	Pulley Endcap Assembly Twist Lock UT 817
	A0996 A3635	Guide Feed UT 801/403 STD w/ Hardware Each Guide Feed UT SET 418
	A1792	UT Encapsulation Track Hardware Kit
	A1793	UT Screw-on Track Hardware Kit
	A0953	Track Package UT 403 for Detachable Rope (4 guides, pulleys, guide feed, etc.)

© Latham Pool Products, Inc. 2022 All rights reserved.

Flush Track Kits and Hardware

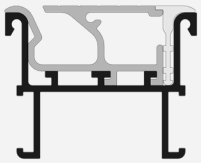	A2123 X0849 X0850 X0847	Track RHT 308 (recessed horizontal all metal) w/ Shim 22’ GRAY Track Housing RHT 308 Bottom Piece 22’ GRAY Track RHT 308 (all metal) Top Piece 22’ GRAY Spacer for RHT 308 22’ GRAY
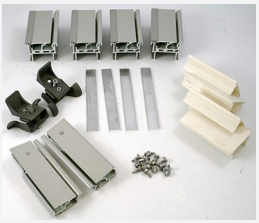	A2143 A2145 A2200 A2141 A0257 X0865	Track package RHT 308 (4 guides, pulleys, guide feed, etc.) GRAY Track Package RHT 308 w/ Protector (4 guides, pulleys, guide feed, etc.) GRAY Parts Kit Track Hardware for RHT 308 (recessed horizontal) (endcaps, guide feed, etc.) GRAY Pulley Endcap RHT 308 (recessed horizontal L & R) GRAY Guide Feed RHT-S (Screw-down) SET Protector for RHT 308 22’ White
	X0117 A0826 X0331	Track RHT-S, Screw-down (no housing) 22 ft Track and Housing RHT-S, Screw-down 22 ft Housing RHT-S, C-Channel Plastic EA
	A0825 A1794 A1496	Track Package RHT-S Screw-down (4 guides, pulleys, guide feed, housing, etc.) Top Track Horizontal Flush Deck, Screw-down Hardware Kit Pulley Endcap Assembly RHT-S Screw-down SET Rev. 305
	A2368	RHT 308 Curved Track, Housing, Splice 3’ Set of 2 GRAY
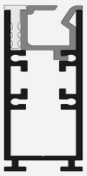	A0021 X0585 X0586 X0587	Slim Flush Track - Guide and Housing Assembly Slim Flush Track - Housing Slim Flush Track Slim Flush Track - Spacer 22’ GRAY
	A0009 A0004 A0005 A0006 M9797 M0015	Slim Flush Track Hardware Kit Slim Flush Track - Guide Feed Assembly Slim Flush Guide - End Pulley Assembly Slim Flush Guide - Guide Feed with Pulley Stop TT 403 L Shaped SS Slim Flush Track Splice

© Latham Pool Products, Inc. 2022 All rights reserved.

Other Manufacturer’s Hardware

	RA1034	Cover Pools Guide Feed TT L & R NET SET
	RP1036 RP1037	Cover Pools UT Slider w/ Plate LEFT Cover Pools UT Slider w/ Plate RIGHT
	A4020	Cover Pools Rotary Encoder Assembly
	RP8075	Aquamatic Universal Screw-on Slider w/ 4 Screws
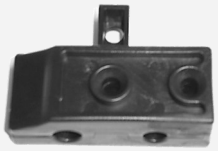	RP8073 RP8074 RP8064 RP8063	Aquamatic TT Guide Feed LEFT Aquamatic TT Guide Feed RIGHT Aquamatic UT Guide Feed LEFT Aquamatic UT Guide Feed RIGHT
	UT1013	PCS Split Guide Kit UT for Old Style Channel Track (Plastic)
	TT1010	PCS TT Speed Guide Kit SS
	22727	PCS Snap-in Under Track Slider

© Latham Pool Products, Inc. 2022 All rights reserved.

Conversion Kits

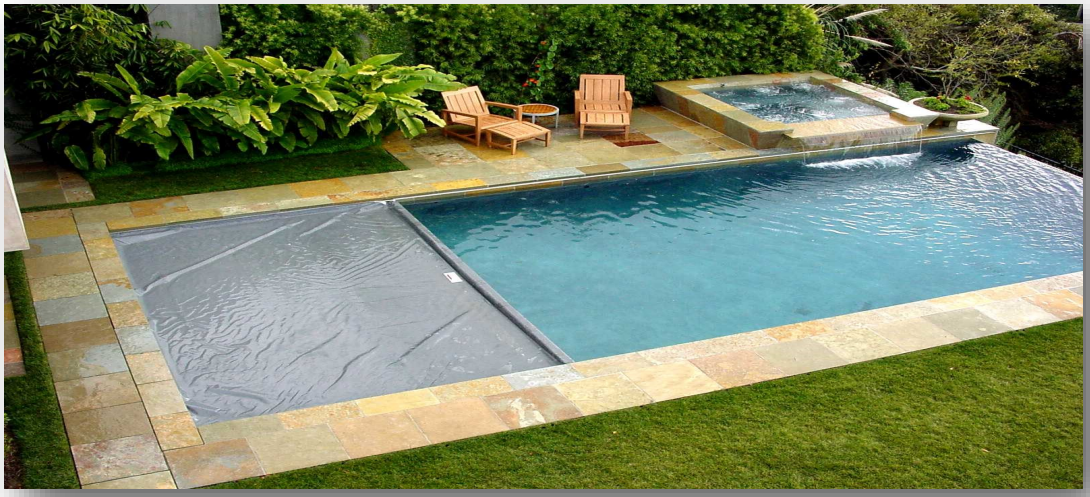

A1042	Track Conversion Package, TT 20’ Anodized 2-1/2” LE (track, LE, track hardware, wheel assembly)
A1043	Track Conversion Package, TT 24’ Anodized 2-1/2” LE (track, LE, track hardware, wheel assembly)
A1040	Track Conversion Package UT 24’ Anodized 2-1/2” LE (track, LE, track hardware, LE insert assembly)
A1058	Track Conversion Package 403 UT 42’ 20’ LE (track, 3” tube, track hardware, LE insert assembly)
A1054	Track Conversion Package 403 TT 44’ 20’ LE (track, 3” tube, track hardware, LE insert assembly)
A1039	Track Conversion Package UT 20’ Anodized 2-1/2” LE (track, tube, track hardware, LE insert assembly)
A0694	PCS Bison Motor Spacer Adapter Assembly

© Latham Pool Products, Inc. 2022 All rights reserved.

Hydraulic Motors & Hardware

	A0698 A0699 A0700	Hydraulic Motor 8 cu in 30 rpm sqft > 800 w/ Hardware Hydraulic Motor 10 cu in sqft > 2000 w/ Hardware Hydraulic Motor 12 cu in (special order only) w/ Hardware
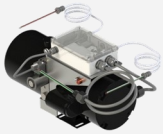	A0572 A3200	Hydraulic Power Pack Complete US 220V 121 Power Pack with Relay Assembly
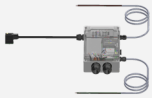	E1161	Hydraulic Control Board Compatible w/ 24DC Solenoid 121
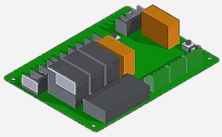	E1139 A3481	Hydraulic Feature Control Module Multi Valve Board
	44002 D0039	Hydraulic Hoses w/ Fittings (2 hoses included) Per ft Hydraulic Hose Synflex Per ft STD
	D0040	Hydraulic Hose Fitting for Synflex Female JIC STD
	D0047	Hydraulic Power Pack Dipstick Pre-2012
	A1848	Hydraulic Motor Coupler Assembly for 2012 Eclipse

© Latham Pool Products, Inc. 2022 All rights reserved.

Motors & Motor Controllers

	A3361	Standard 3 Wire Motor with Limit Control
	E2000 E1028	Latham AC Motor 115VAC SS Motor Assembly 3 Wire 30 RPM HEAVY DUTY 2006
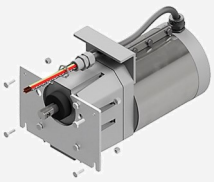	A0712 A1921 A0610	Motor Bison 3 Wire 30 RPM HEAVY DUTY w/ Eclipse Motor Mounting Bracket Motor & Housing w/ Bison 3 wire HD w/ CS1800 Motor Mounting Bracket Motor & Housing w/ Bison 3 wire STD w/ CS1800 Motor Mounting Bracket
	E1058	Gear Motor 3/4HP 3 Wire Tuck Under Bison
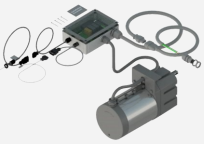	A3506	Motor 3 Wire HD w/ Limit Switch & LV Wiring
	A3360	3 Wire Limit Control and Sensor
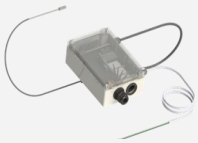	E1160	Motor Control Board for Electric Motors 121

© Latham Pool Products, Inc. 2022 All rights reserved.

Electrical Controls

	A2570	Touch Screen Controller
	A0605	Control Switch Assembly Complete w/ Light STD
	A2469-A	Standard Touch Pad Assembly
	A2524 A2529 A2525 A2520 A2519 A2523 A2463	Wireless Touch Pad with Feature Control Wireless Touch Pad with Host Remote Touch Pad Host Assembly LV Touch Pad with WiFi LV Touch Pad LV Touch Pad RF Module Touch Pad Safety Alert Capable with WiFi
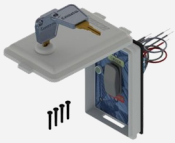	A0608	Control Switch Assembly - Toggle Rocker
	E0447	Limit Switch Sensor for Circuit Board (Black) N.O. Hamilton 59145-010 (use w/ Magnet E0452) STD
	E1137	Communications Module PCA
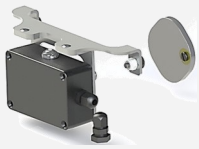	A0065 A0066 A3640	Eclipse Rotary Encoder CS300HD Rotary Encoder CS3000 Encoder Assembly

© Latham Pool Products, Inc. 2022 All rights reserved.

Reusable Coping Forms & Kits

	X0743 A1578 A1735 A1252 A1254	Coping Form 403 Inclined 6 ft. Coping Form 403 Inclined 6 ft. w/ Splice & 3 Spacers Coping Form Hardware Kit for Inclined 403 Coping Form Kit 403 Reusable Inclined 20 x 40 Coping Form Kit 403 Reusable Inclined 22 x 50
	X0719 A1577 A1736 A1145 A1253	Coping Form 403 Cantilever 6 ft. Coping Form 403 Cantilever 6 ft. w/ Splice & 3 Spacers Coping Form Hardware Kit for Cantilever Coping Form Kit 403 Reusable Cantilever 20 x 40 Coping Form Kit 403 Reusable Cantilever 22 x 50

© Latham Pool Products, Inc. 2022 All rights reserved.

2 Piece Reusable Coping Forms

	A0995	Coping Form Cantilever Kit for 2 Piece Set for 20 x 40 w/ Corners (no hardware)
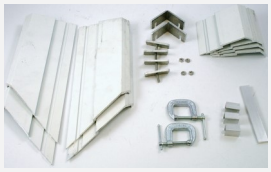	A0992	Coping Form Support Plate 2 Piece Kit 403 for 20 x 40 w/ Hardware
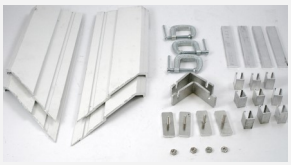	A1734	Coping Form Support Plate Hardware Kit 2 Piece
	X0691	Coping Form Cantilever Top Piece Only 6’ Used w/ 403 or 801 Support Plate
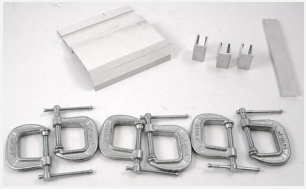	A1080	Coping Form Support Plate for 403 w/ 3 Spacers, 3 Clamps, 1 Splice

© Latham Pool Products, Inc. 2022 All rights reserved.

Box Perimeter & Lid Forming

A1125	Box perimeter forming encapsulation and brackets kit for VL pool, 14 in. box up to 24 ft. Use w/ box perimeter forming kit
A1419	Box perimeter forming encapsulation and brackets kit for variable lid thicknesses gunite pool 14 in. box up to 24 ft. (Consumables) Use when lid thickness requires vertical adjustment
A1489	Box perimeter forming encapsulation and brackets kit for Gunite pool 14 in. box up to 24 ft. (Consumables) Use with box perimeter forming kit
A1532	Box perimeter forming encapsulation and brackets kit for Gunite pool 14 in. box 4 ft. add-on extension kit
A1150	Box Perimeter Reusable Forming Kit 2-1/2” Used w/ 1 Piece Coping Forms 24’ Box (order lid perimeter encapsulation and brackets separately)
X0695	Box form 2-1/2 in. vertical extrusion 6 ft. length

© Latham Pool Products, Inc. 2022 All rights reserved.

Lid Forming Molds & Kits - Inclined

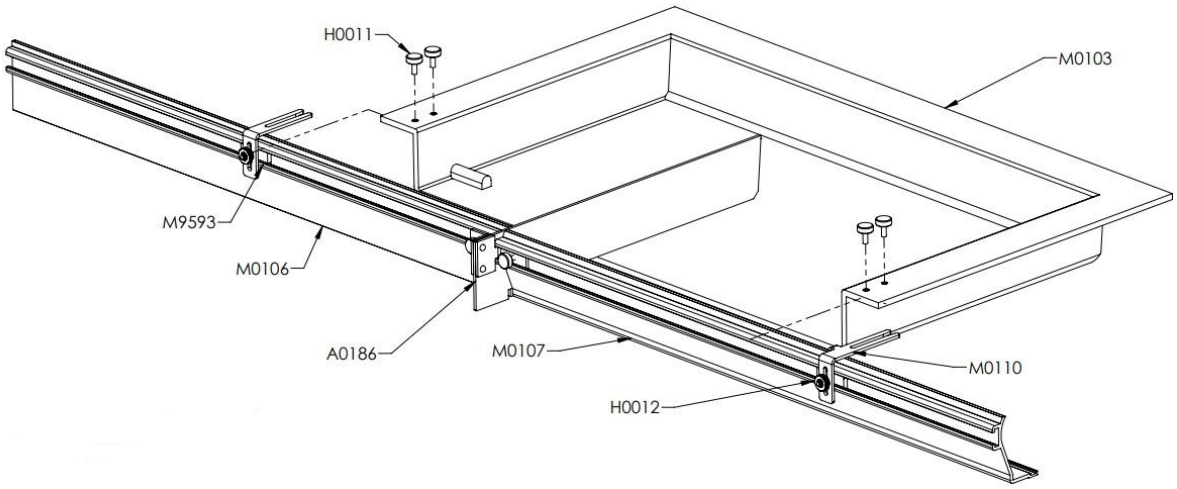

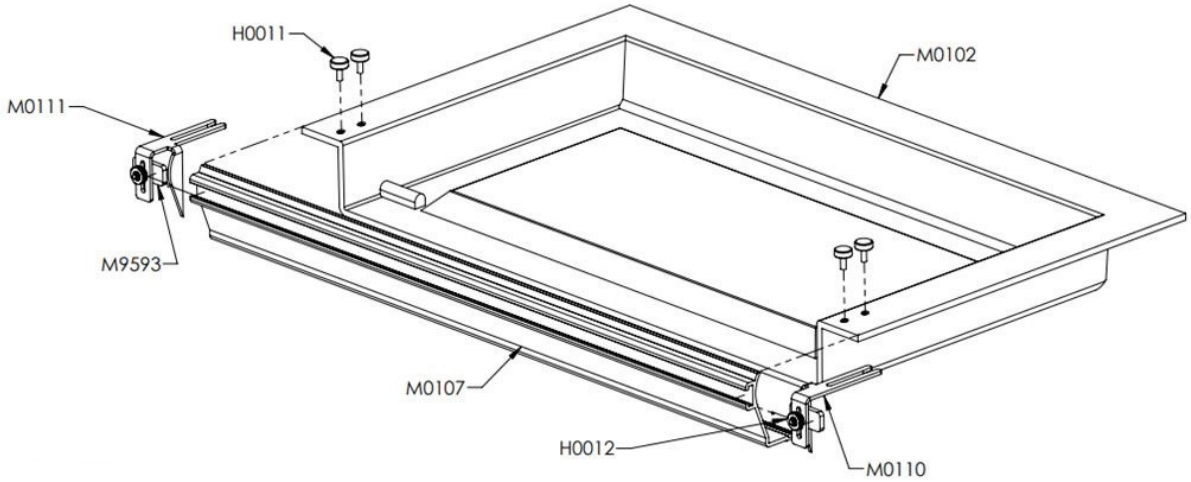

A1021	Inclined Formed Lid Mold
A1028	Lid Forming Inclined Adjustable Divided Mold
M0110	Inclined Lid Forming Retainer Bracket RIGHT
M0111	Inclined Lid Forming Retainer Bracket LEFT
M0107	403 Inclined Deck Form 28” L (X0743)
A2275	Inclined Lid Forming Kit
A1119	Box Perimeter & Lid Forming Inclined 1 Piece

© Latham Pool Products, Inc. 2022 All rights reserved.

Lid Forming Molds & Kits - Cantilever

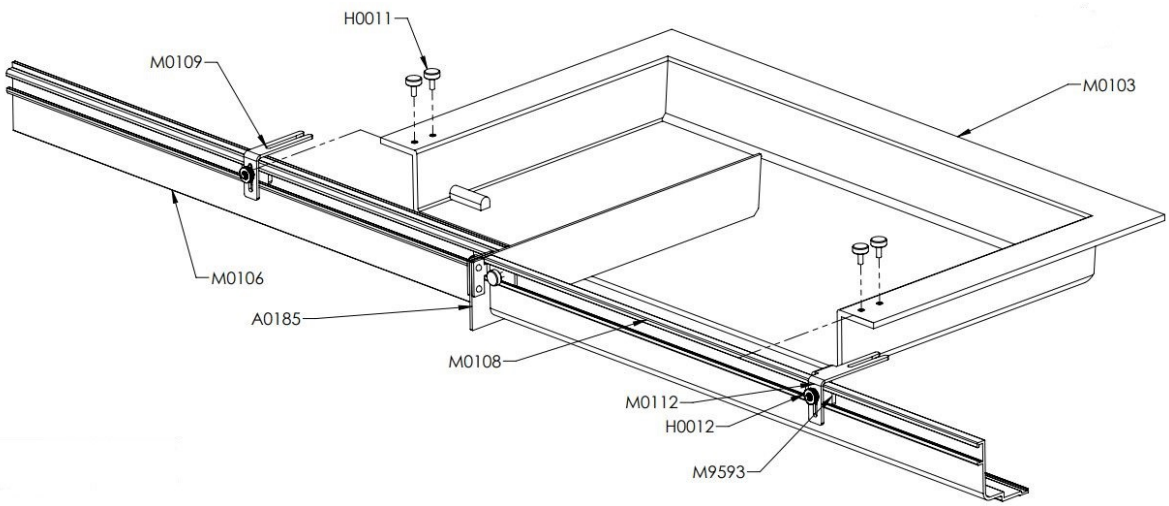

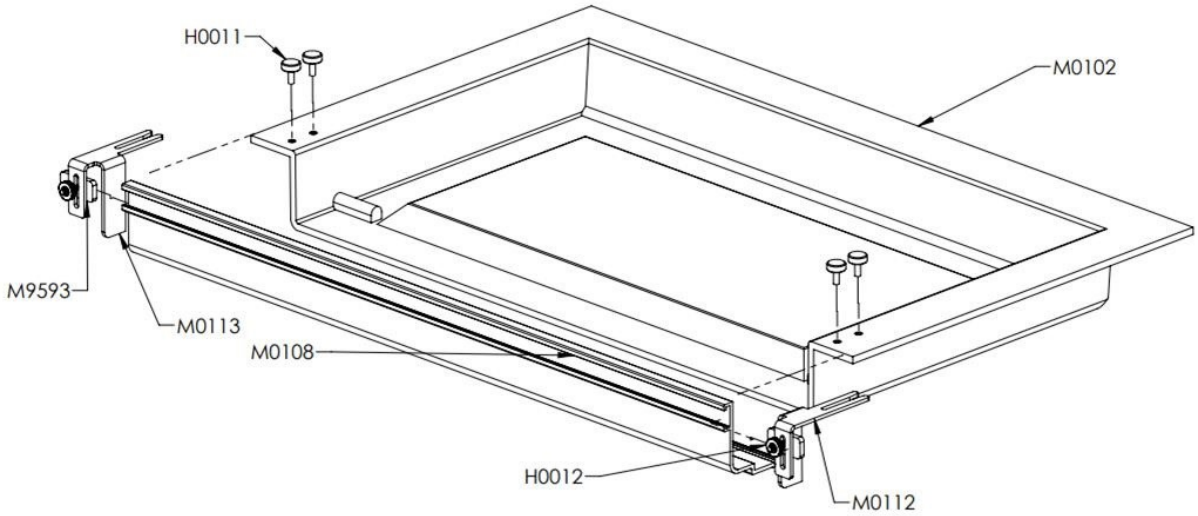

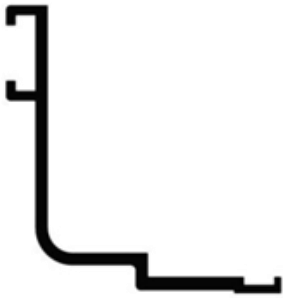

A1024	Cantilever Formed Lid Mold
A1027	Lid Forming Cantilever Adjustable Divided Mold
M0112	Cantilever Lid Forming Retainer Bracket RIGHT
M0113	Cantilever Lid Forming Retainer Bracket LEFT
M0108	403 Cantilever Deck Form 28” L (X0719)
A2276	Cantilever Lid Forming Kit
A1120	Box Perimeter & Lid Forming Cantilever 1 Piece

© Latham Pool Products, Inc. 2022 All rights reserved.

Lid Descenders & Transition Pieces UT

	A1752	Descender Kit NO PROFILE (Metal C-Cap) for Flush Lid Panels up to 20’ TS
	A1111 A1110 A1112	Descender Kit Bullnose for Flush Lid Panels up to 22’ TS Descender Kit Rounded for Flush Lid Panels up to 22’ TS Descender Kit Inclined for Flush Lid Panels up to 22’ TS
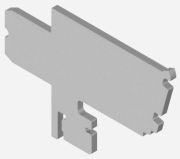	M9381	Coping Transition - Joins Inclined Coping to Riser 309
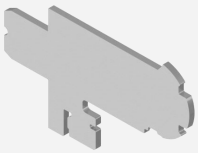	M9382	Coping Transition - Joins Bullnose Coping to Riser 309
	M0132	Coping Transition - Joins Rounded Coping to Riser 419
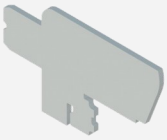	M9388	Coping Transition - Joins Inclined Reusable Coping Form to Riser
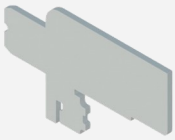	M9389	Coping Transition - Joins Cantilever Reusable Coping Form to Riser

© Latham Pool Products, Inc. 2022 All rights reserved.

Walk-on Tray Lids Aluminum

A0189	Lid Tray Walk-on Alum Mesh 14” x 23-3/4” (side w/ lip) 1 week
A0229	Lid Tray Walk-on Mesh 24” x 23-3/4” (side w/ lip) 1 week
A0230	Lid Tray Walk-on Mesh 24” x 17-3/4” (side w/ lip) 1 week
A0052	Lid Tray Walk-on Custom Size Specify Dimensions 1 week

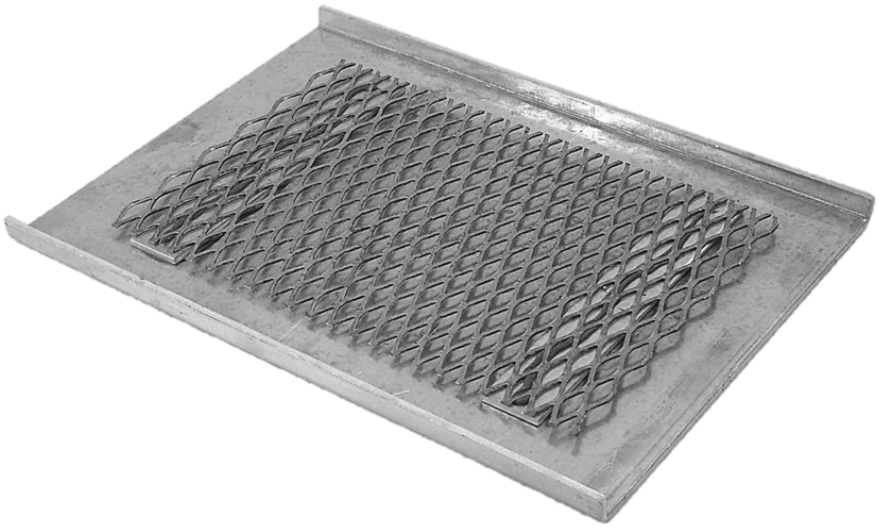

© Latham Pool Products, Inc. 2022 All rights reserved.

Vinyl Liner Encapsulation Kits & Quick-Snap Corner Options

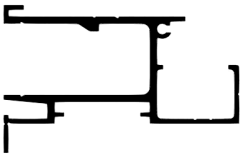

X2650	Encapsulation Vinyl Liner 21’ Piece 521
A6002	Encapsulation Kit 12 x 24 Vinyl Liner 521
A6003	Encapsulation Kit 16 x 32 Vinyl Liner 521
A6004	Encapsulation Kit 18 x 36 Vinyl Liner 521
A6005	Encapsulation Kit 20 x 40 Vinyl Liner 521
A6006	Encapsulation Kit 22 x 50 Vinyl Liner 521

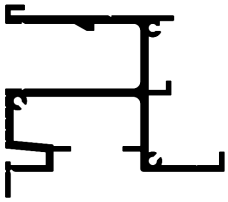

X0420	Encapsulation Raised Vinyl Liner 21’ Piece 1218
VLR4001	Raised Vinyl Liner Encapsulation Kit 12 x 24
VLR4002	Raised Vinyl Liner Encapsulation Kit 16 x 32
VLR4003	Raised Vinyl Liner Encapsulation Kit 20 x 40
VLR4004	Raised Vinyl Liner Encapsulation Kit 22 x 50

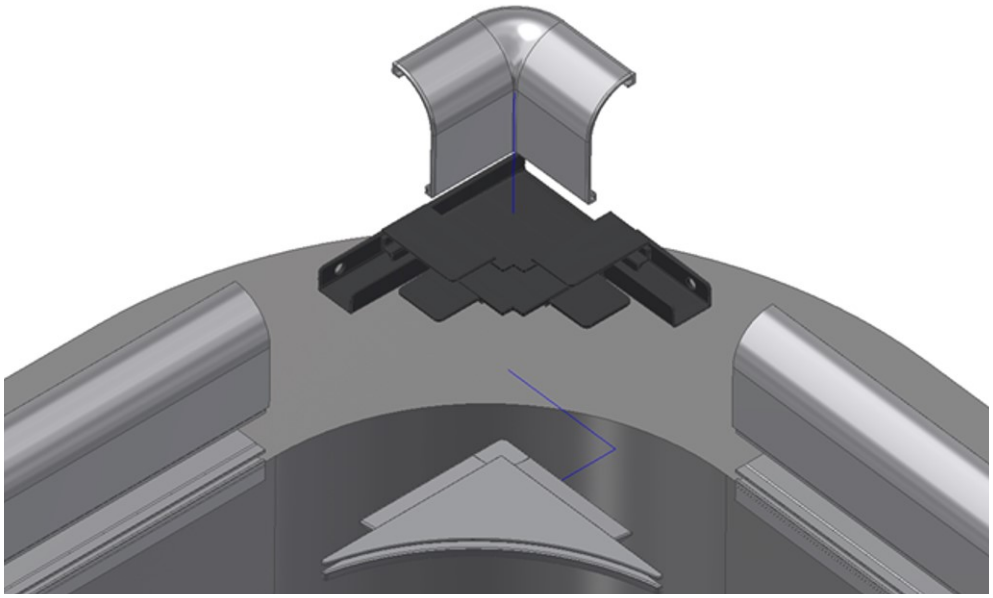

A0460	Quick-Snap Corner 2 ft Radius VL Kit 521 (4 radius inserts, 2 corner pockets)
A0459	Quick-Snap Corner 3 in Chop VL Kit 521 (4 chop inserts, 2 corner pockets)
A0458	Quick-Snap Corner 6 in Radius VL Kit 521 (4 radius inserts, 2 corner pockets)
M8085	Quick-Snap Corner VL Encapsulation Corner Pocket EA
M8098	Quick-Snap Corner 3 in Chopped VL Insert EA
22666-QGR	Quick-Snap 2 ft Radius Corner (Quartz Gray) EA

© Latham Pool Products, Inc. 2022 All rights reserved.

Corner Options - VL Encapsulation

A2103	Corner One Piece Rounded 2’ Radius ME LEFT
A2102	Corner One Piece Rounded 2’ Radius ME RIGHT
A2104	Corner One Piece Rounded 2’ Radius NME
A2154	Corner One Piece Rounded 3” Chopped ME LEFT
A2153	Corner One Piece Rounded 3” Chopped ME RIGHT
A2155	Corner One Piece Rounded 3” Chopped NME
A2108	Corner One Piece Rounded 6” Radius ME LEFT
A2107	Corner One Piece Rounded 6” Radius ME RIGHT
A2109	Corner One Piece Rounded 6” Radius NME
A2192	Corner One Piece Rounded 90 Degree ME LEFT
A2193	Corner One Piece Rounded 90 Degree ME RIGHT
A2105	Corner One Piece Rounded 90 Degree NME
A4102	Corner Kit 2’ Radius for Vinyl Liner 4 Corners 418
A4101	Corner Kit 3” Chopped for Vinyl Liner 4 Corners 418
A4100	Corner Kit 6” Radius for Vinyl Liner 4 Corners 418
A3949	Corner 2’ Radius for Vinyl Liner ME LEFT 418
A3948	Corner 2’ Radius for Vinyl Liner ME RIGHT 418
A3947	Corner 2’ Radius for Vinyl Liner NME 418
A3946	Corner 2’ Radius for Vinyl Liner NME LEFT w/ Support Brace 418
A3945	Corner 3” Chopped for Vinyl Liner ME LEFT 418
A3944	Corner 3” Chopped for Vinyl Liner ME RIGHT 418
A3943	Corner 3” Chopped for Vinyl Liner NME 418
A3942	Corner 6” Radius for Vinyl Liner ME LEFT 418
A3941	Corner 6” Radius for Vinyl Liner ME RIGHT 418
A3940	Corner 6“ Radius for Vinyl Liner NME 418

© Latham Pool Products, Inc. 2022 All rights reserved.

Vinyl Liner Coping & Encapsulation Kits

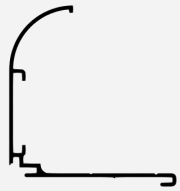	X1904 A1244 A1247 A0703 A1250	Clip-on Coping Rounded Edge 21’ Piece 222 Coping Clip-on Kit Rounded Edge 16 x 32 Coping Clip-on Kit Rounded Edge 18 x 36 Coping Clip-on Kit Rounded Edge 20 x 40 Coping Clip-on Kit Rounded Edge 22 x 50
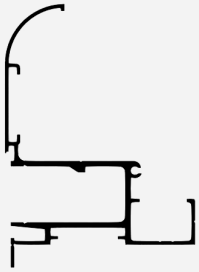	X1955 X1954 A6021 A6022 A6023 A6024 A6025 A6026 A6027	Coping Rounded 16’ 2” Piece 521 Coping Rounded 8’ 1” Piece 521 Encapsulation Kit 10 x 20 One Piece Rounded 521 Encapsulation Kit 12 x 24 One Piece Rounded 521 Encapsulation Kit 14 x 28 One Piece Rounded 521 Encapsulation Kit 16 x 32 One Piece Rounded 521 Encapsulation Kit 18 x 36 One Piece Rounded 521 Encapsulation Kit 20 x 40 One Piece Rounded 521 Encapsulation Kit 22 x 50 One Piece Rounded 521
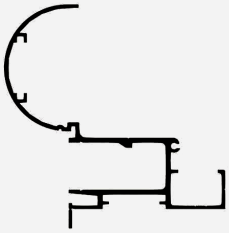	X1947 X1948 A6016 A6017 A6018 A6019 A6020	Coping Bullnose 16’ 2” Piece 521 Coping Bullnose 8’ 1” Piece Encapsulation Kit 12 x 24 One Piece Bullnose 521 Encapsulation Kit 16 x 32 One Piece Bullnose 521 Encapsulation Kit 18 x 36 One Piece Bullnose 521 Encapsulation Kit 20 x 40 One Piece Bullnose 521 Encapsulation Kit 22 x 50 One Piece Bullnose 521
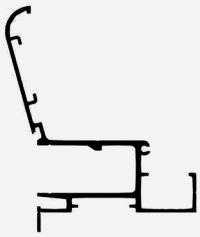	X1956 X1957 A6028 A6029 A6030 A6031 A6032	Coping Inclined 16’ 2” Piece 521 Coping Inclined 8’ 1” Piece 521 Encapsulation 12 x 24 One Piece Inclined 521 Encapsulation 16 x 32 One Piece Inclined 521 Encapsulation 18 x 36 One Piece Inclined 521 Encapsulation 20 x 40 One Piece Inclined 521 Encapsulation 22 x 50 One Piece Inclined 521
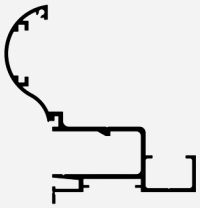	X1870 X1871 A6047 A6048 A6049 A6050	P-Shaped One Piece 16’ 2” 521 P-Shape 8’ 1” Piece 521 Encapsulation Kit 16 x 32 P-Shaped 521 Encapsulation Kit 18 x 36 P-Shaped 521 Encapsulation Kit 20 x 40 P-Shaped 521 Encapsulation Kit 22 x 50 P-Shaped 521

© Latham Pool Products, Inc. 2022 All rights reserved.

Gunite & Fiberglass Encapsulation Kits

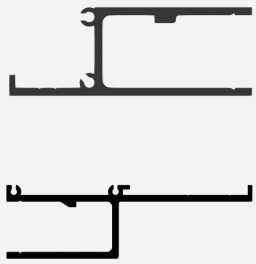	X1651 A5010 A5011 A5012 A5013 A5014 A5015 X0410	Encapsulation Gunite 21’ 418 Encapsulation Kit 10 x 20 Gunite 418 Encapsulation Kit 12 x 24 Gunite 418 Encapsulation Kit 16 x 32 Gunite 418 Encapsulation Kit 18 x 36 Gunite 418 Encapsulation Kit 20 x 40 Gunite 418 Encapsulation Kit 22 x 50 Gunite 418 Encapsulation Cantilever Gunite 21’ 1218
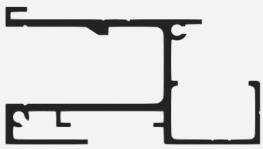	X2953 A6036 A6038 A6040 A3523 A6034 A6035	Encapsulation Fiberglass 21’ 521 Encapsulation Kit 12 x 24 Fiberglass 521 Encapsulation Kit 16 x 32 Fiberglass 521 Encapsulation Kit 16 x 40 Fiberglass 521 Fiberglass 90 Degree NME Corner 418 Encapsulation Kit 20 x 40 Pool in Pool 521 Encapsulation Kit 22 x 50 Pool in Pool 521

© Latham Pool Products, Inc. 2022 All rights reserved.

Hardware for Encapsulation Kits

	X0091	Spacer for Encapsulation for VL & Fiberglass 21 ft.
	X0092	Spacer for Encapsulation - Gunite 21 ft.
	X0125	Encapsulation Filler Metal for 801 and 403, 10 ft.
	X1175	Encapsulation Filler Metal 121, 10 ft.
	A0407 A1729	Bracket Encapsulation UT Track Retainer SET Encapsulation Hardware Kit (Plastic anchors & screws)
	A1749 M9882	Coping Joint Clip Splice 2005 Inclined Coping 12 Pk Coping Joint Clip Splice 2005 Inclined Coping EA
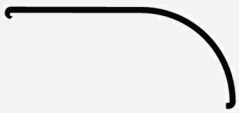	M8080	Coping Joint Clip Rounded Each 521
	A1748 M9881	Coping Joint Clip 805 Bullnose 12 Pk Coping Joint Clip 805 Bullnose Each

© Latham Pool Products, Inc. 2022 All rights reserved.