Hydraulic Motor Under Track System

Shown with Encapsulated Track

All Corners Square

¾ inch overhang both sides of pool

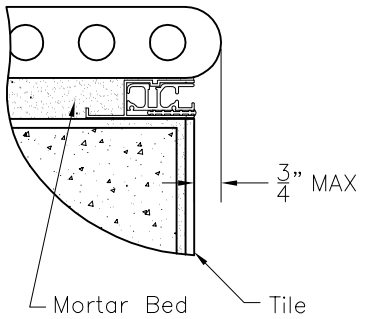

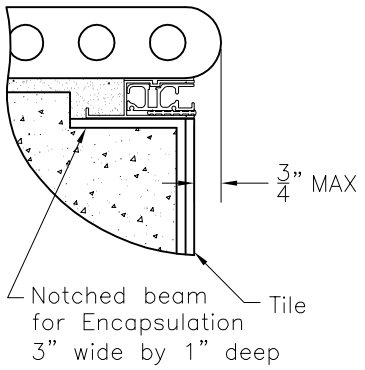

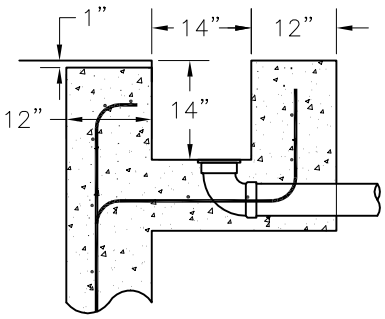

Because coping and deck thickness vary, housing depth is always measured from the top of beam or top of encapsulation.

A

B

General Requirements
1. Pool must be true rectangle. (AB=CD, AC=BD, AD=BC)
2. Mechanism end bond beam and interior walls must be 1 inch lower.
3. Deck or coping around pool must not cantilever more than ¾ inch beyond Encapsulation.
4. Encapsulation will add 1 inch to pool elevation unless notching beam for encapsulation.
5. One 3 inch diameter drain from housing required. Adequate housing drainage required.

Excavation
1. Layout must be true rectangle and corners cut square.
2. Skimmers and other plumbing not deeper than housing may not be located on mechanism end bond beam.
3. For polymer housing dig 16" down and 24" back from pool. Dig 4' past waters edge on motor side and 2' on non motor side. For concrete housing dig 24" down and 24" back from pool. Dig 4' past waters edge on motor side and 2' on non motor side.
4. If drywell will be used for drainage, for convenience dig at this time. Dig hole 30 inches wide and 7 feet deep, 1 foot of stone in bottom. See drywall in this manual

Cover Housing
1. Install housing or form for concrete housing after excavation but before steel and gunite. Refer to housing options for installation.
2. Stake housing or form in place. It should not move before and during gunite.
3. Motor end offset is 36" and non motor side is 12" from interior of pool walls.
4. Housing is 14" wide and 14" deeper than side wall bond beam elevation for pools up to 55' long or up to 25' wide. For pools exceeding these legnths contact your Coverstar distributor.

Steel
1. All corners are square.
2. Steel mechanism end wall and interior spa walls 2 inches lower.
3. If cover housing is connected to gunite pool, steel around concrete form.

Plumbing
1. Avoid placing plumbing under housing. If required, plumbing and light conduits must be kept 16 inches lower than side wall elevation in housing area.
2. 3 inch drain required at motor end of housing. Non-motor end drain also is best. Keep drains tight to housing ends.
3. Set skimmer height for water level 3 inches below bond beam or below notch for encapsulation

Electrical
1. #8 solid bond wire with 3 foot tail at each end of housing. Wire must be bonded to equipment pad.
2. Motor under full load rated 14 AMP 240VAC. Use adequate wire size and follow required codes.
3. If hydraulic pump is not with in 5' of equipment panel, wires to pump should terminate in all weaather junction box. Circuit boards require wire for 5VDC run in conduit seperate from AC wiring.
4. Key switch requires single gang all weather junction box. It must be located where 100 % of pool surface is visable. If pool is outside switch should be outside also.

Gunlte
1. Pool shell must be true rectangle. (AB=CD, AC=BD, AD=BC)
2. All corners are cut square.
3. Mechanism end bond beam is 1 inch lower between side bond beams or encapsulation notches.
4. Interior spa walls are at least 1 inch lower than side bond beams or encapsulation notch.
5. If matching width of coping and lid stones(14 inches), make top of bond beams 13" wide.

Cantilevered Edge
1. Cantilever edge cannot overhang more than ¾ beyond encapsulation, including edge treatments such as bullnose, round over or rock facing.
2. If planning to match walk-on lid with coping, material should be 2 inches thick and/or have sufficient strength to span brackets 24 inches apart. Material selection and strength is responsibility of builder.
3. Cantilevered edge continues over lowered bond beam ending flush with inside of housing.

Tile
1. Tile top of lowered bond beam. The finished surface of the lowered bond beam must be at least ½ inch below bottom of encapsulation. Top may be flat or slope ½ inches down to pool.
2. Interior spa wall must finish at least ½ inch below bottom of encapsulation. There cannot be rough edges or sharp corners.

Cover Installation
1. Cover may be installed only after pool water is with in 6" of guides
2. In no case may cover be left over pool without water level in pool at final elevation.

Lowered Bond Beam
1" Lower

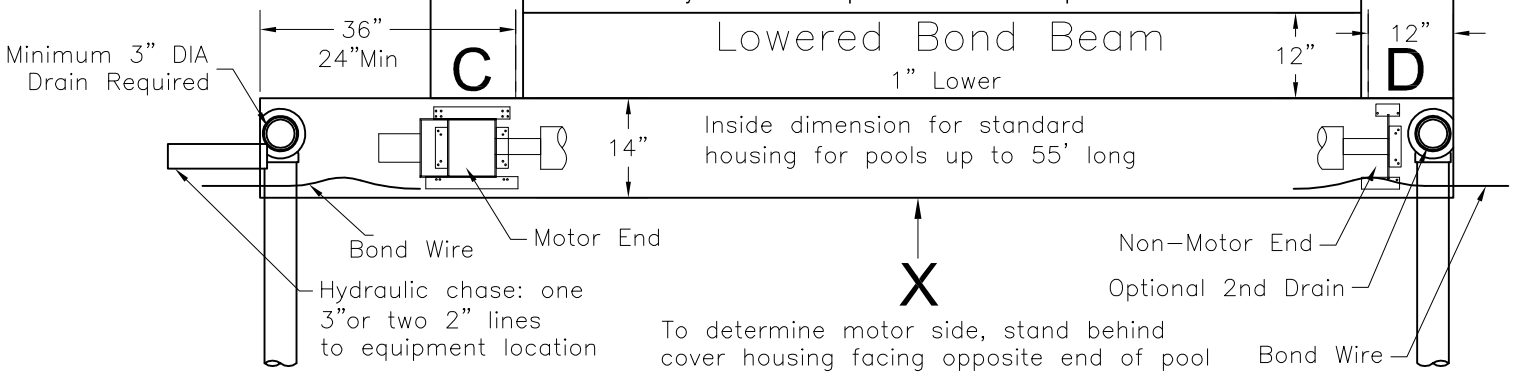

© Latham Pool Products, Inc. 2018. All rights reserved.